RAINDECK

PRODUCT CATALOG

Contents

About Rain Deck 2

Splash Pad Markets 5

Splash Pad Design 7

Splash Pad Systems 8

Commercial Above Ground Features 9

Light Commercial Above Ground Features 71

Custom Features 91

Ground Spray Elements 93

LED Lighting 99

Splash Pad Kits 101

Control Systems and Activators 105

Pumps, Filters, Parts & More 107

Holding Tanks 109

Rubber Surfacing 111

Installation Support 113

About Rain Deck

Rain Deck is the Industry Leader in Commercial, Light Commercial and Residential Splash Pad Products

Rain Deck splash pad products represent the best in quality, innovation, and affordability. Rain Deck stands on the commitment to provide a wide platform of exceptional products and splash pad expertise that will allow our partners to deliver safe and enjoyable splash pad environments.

With a comprehensive selection of premium splash pad products, Rain Deck can fulfill any splash pad need from the large community splash pad to the individual residential application. Our relentless commitment to creating and manufacturing products that exceed industry expectations has placed Rain Deck as a leading manufacturer in the aquatic recreational industry. Along with a versatile collection of products, Rain Deck remains committed to provide our customers with reliable solutions to any splash pad application, including architectural design and access to an ever-expanding database of qualified Rain Deck installers.

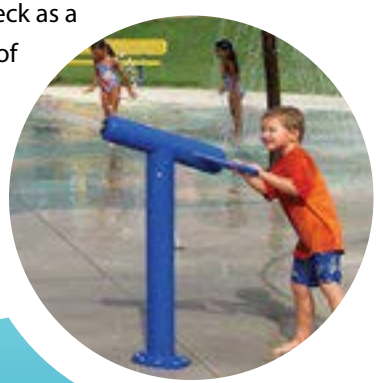

Rain Deck's passion and enthusiasm for all things splash pad is your key to quality and affordability. With a qualified team of innovators we are able to partner with our customers from the moment of design inspiration to final realization of splash pad entertainment. From a wide range of commercial grade stainless steel splash pad features to category-defining light commercial splash pad products, and our patented residential splash pad kits, we lead the industry in bringing splash pads to a wider selection of applications such as campgrounds, child care centers and RV parks.

Our success is dependent on creating value for our customers. We aim to deliver on our promises of providing you unique, reliable, and affordable products that bring continuous joy year round for those who make a splash on a splash pad with Rain Deck water features. We invite you to explore our Commercial Splash Pad, Light-Commercial Splash Pad, and Residential Splash Pad product lines.

LET THE FUN BEGIN!

Our Commitment

Warranty You can have confidence in your Rain Deck products. Rain Deck offers the best warranty in the industry, with a lifetime warranty on all our ground spray nozzles.

Durability With a comprehensive Stainless Steel product line, Rain Deck delivers to each splash pad the reliability that is critical to a commercial splash pad. All components of a high traffic commercial splash pad need to be robust so that they can perform day in and day out, under all aspects of stress and use. Rain Deck provides the highest quality of stainless steel products that can hold up to and perform flawlessly in all environments. Rain Deck's distinctive advantage is providing our clients with the ability to interchange above ground water features with our interchangeable Rain Deck Footing Bases.

Affordability Rain Deck provides Commercial Splash Pad products that have been refined through in-house testing and comprehensive customer feedback. We manufacture all in-house, with a state of the art fabrication and CNC machine facility. Because of our processes, we have identified the most popular and effective commercial products that fit in a wide variety of splash pad designs. At Rain Deck we work by the rule that we perfect the best products so that our products stand the test of time; and in turn, save you money. With continual refinement and innovation of our popular products, Rain Deck is able to pass the savings on to you, our customers.

Versatile Splash Pad System

Rain Deck strives to keep things simple and user friendly! Nearly 100% all of Rain Deck's above ground features are completely removable and interchangeable. Our universal footing base allows every customer the versatility to swap and/or add new features at any time. With our interchangeability and expandability, Rain Deck splash pads can be built with a very small budget. This way, water play can begin now, and the splash pad can grow and evolve over time! This alone sets us apart from all other splash pad manufacturers. In addition to the versatility of our above ground features, our spray jets are also removable and interchangeable! The Rain Deck universal housing is incorporated throughout our extensive product line giving you endless water play possibilities! This allows the customer to interchange ground spray nozzles, as well as the spray nozzles on many of the above ground features. Rain Deck currently offers a great variety of spray nozzles to fit your every need. These nozzles, as well as any future spray nozzle designs, are compatible with the Rain Deck universal housing.

Rain X-Change™ Program

Concerned that your splash pad feature may become outdated or boring? Ever thought of swapping a used feature for a brand new one? Through our Rain X-Change Program™, customers can keep the most popular and up-to-date features on their splash pad at affordable prices. Contact one of our professional sales representatives to ask about our Rain X-Change Program™ and learn how to keep the most popular and latest features on your Splash Pad!

Splash Pad Markets

Rain Deck prides itself on being the only splash pad product manufacturer that caters to all three splash pad markets: Commercial, Light-Commercial, and Residential. This enables us to offer the best splash pads available for every need and budget. Whether you are looking for a small and simple splash pad in your own backyard, a mid-size splash pad for your campground or community park, a large splash pad for a hotel/resort or city park, or anything in between, Rain Deck will be able to assist you every step of the way.

COMMERCIAL SPLASH PADS

Commercial Splash Pads are popping up everywhere today! They are extremely popular for the safety and interactivity they bring to places such as amusement parks, zoos, large resorts, city parks, and more. Their durable stainless steel, powder-coated features can withstand high traffic locations, and their value will add to your commercial property, making it even more attractive to your guests.

PUBLIC PARKS – AMUSEMENT PARKS – LARGE HOA/COMMUNITY PARKS – PUBLIC ZOOS – HOTELS/RESORTS – APARTMENT COMPLEXES

LIGHT COMMERCIAL SPLASH PADS

Rain Deck has advanced the application of splash pads in new and expanding environments never thought possible. Light-Commercial splash pads are extremely unique in that they offer the same benefits as our Commercial splash pads, but at a much more affordable price point. Rain Deck Light-Commercial Splash Pad Products bring incredible value to such places like day care centers, preschools, campgrounds, or any location that has on-site staff and operating hours.

CHILD CARE FACILITIES – SMALL HOA / COMMUNITY PARKS – RV PARKS & CAMPGROUNDS

RESIDENTIAL SPLASH PADS

Residential splash pads are a great fit for any backyard! No matter the size of your backyard, our Residential splash pad products are safe, fun, and affordable. Rain Deck's Patented Splash Pad Kits can be installed by any contractor, handy-man, landscaper or do-it-yourselfer. Rain Deck is the pioneer of the residential splash pad. Having a personal splash pad in your own backyard was not a reality until Rain Deck burst on to the scene with our residential product line over a decade ago. Our goal was to innovate residential splash pad products that would be as reliable as our commercial and light-commercial splash pad products but with a price point that would rival the installation of a traditional swimming pool.

LUXURY HOMES – SEMI-CUSTOM HOMES – TRACT HOMES – CONDOMINIUMS

Splash Pad Design

YOU DREAM IT. WE DESIGN IT.

Rain Deck has designed thousands of custom splash pads to fit a wide variety of themes and uses. Our design team can take your penciled sketch to a fully customized set of working plans. We will work directly with you and your designated architect or designer, thus making the splash pad process seamless. From CAD drawing to full-color 3D rendering, we can do it all. We work hand in hand with our customers to bring their visions to reality. Whether it's a unique color scheme or a one of a kind feature, our design and engineering department is available to meet any need for our splash pad clients. With the unique ability to customize even the smallest feature, Rain Deck is your source for tailored splash pad products.

Splash Pad Systems

Rain Deck offers all types of splash pad systems. From recirculation systems, to fresh water systems, to pool tie-in systems, to grey water systems, Rain Deck can make it happen. Our recirculation splash pads allow for water conservation while using state of the art water treatment systems, including automatic chemical feeders, and UV sanitation. We can also build custom features for your recirculation system, such as sediment filtration tanks or complete skid mounted systems. Fresh water systems can be designed specifically to your needs, enabling the owner to determine the exact GPMs (gallons per minute) used. From simple "easy to install" kits, to custom built splash pad packages, Rain Deck has the experience to design your splash pad from the ground up.

COMMERCIAL ABOVE GROUND FEATURES

Rain Deck's stainless steel commercial features are strong, durable, and carry one of the best warranties in the industry. Additionally, most Rain Deck commercial features come equipped with a stainless steel footing base, making those features removable and interchangeable at no additional cost. Our above ground commercial features are finished with polyester resin powder coat, available in many attractive colors.

COLOR CHART

Powder Coat For Stainless Steel

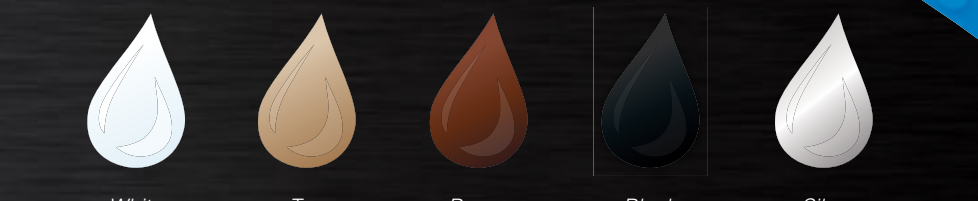

White | Tan | Brown | Black | Silver

Red | Orange | Yellow | Lime Green | Med Green | Dark Green

Aqua | Light Blue | Med Blue | Dark Blue | Purple | Pink

Paint for Fiberglass Buckets & Canopies

Purple | Dark Red | Red | Orange | Pink

Yellow | Lime Green | Med Green | Dark Green | White

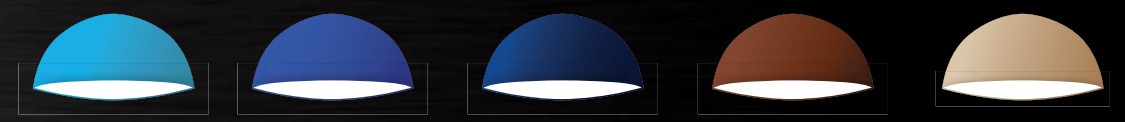

Light Blue | Med Blue | Dark Blue | Brown | Tan

*Custom design patterns, metallics and air brushing are available at an additional charge.

*NOTE: Color samples cannot be considered a totally accurate representation of the actual paint color and should only be used as general guidance for selecting a feature color. All painted items may fade over time due to exposure to the elements.

Water Umbrella 47”

RDS300-0

COMMERCIAL

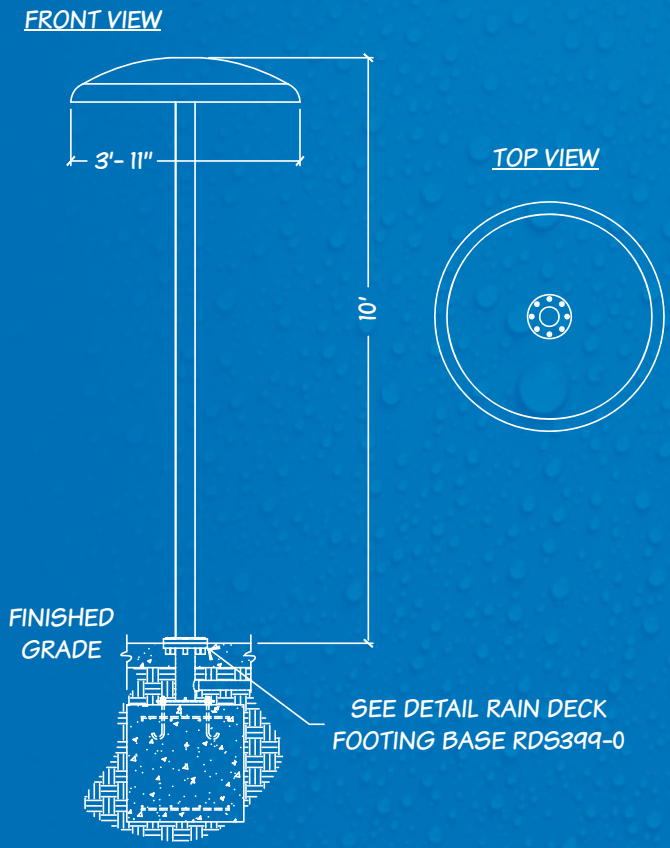

NAME	RDS300-0 SS Water Umbrella 47”
MATERIAL	Stainless Steel, Fiberglass
SURFACE FINISH	Powder Coat
FLOW RATE	10-90 GPM @ > 5 PSI
COMPATABLE WITH	RDS399-0

Water Umbrella 60”

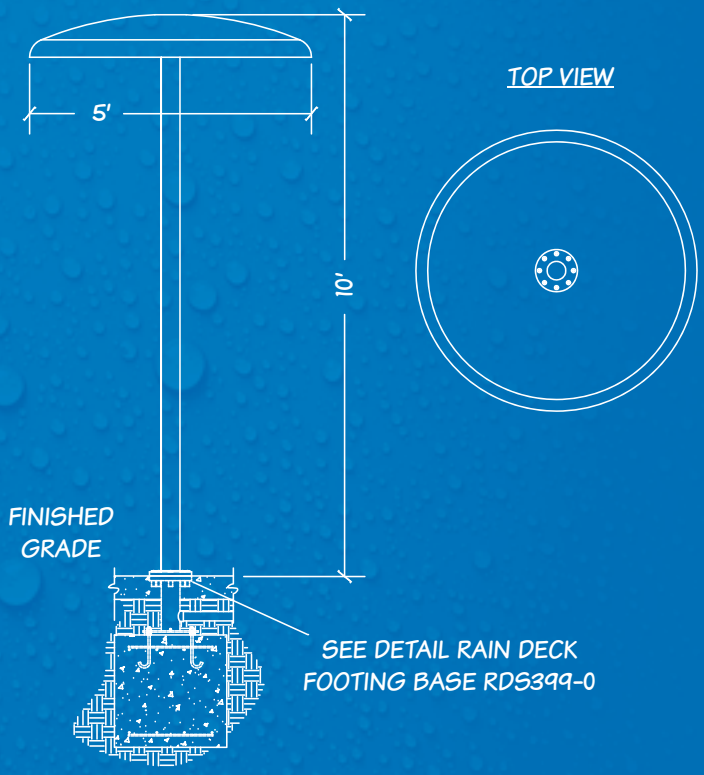

COMMERCIAL

NAME	RDS301-0 SS Water Umbrella 60”
MATERIAL	Stainless Steel, Fiberglass
SURFACE FINISH	Powder Coat
FLOW RATE	10-90 GPM @ > 5 PSI
COMPATABLE WITH	RDS399-0

Water Mushroom 40”

RDS302-0

COMMERCIAL

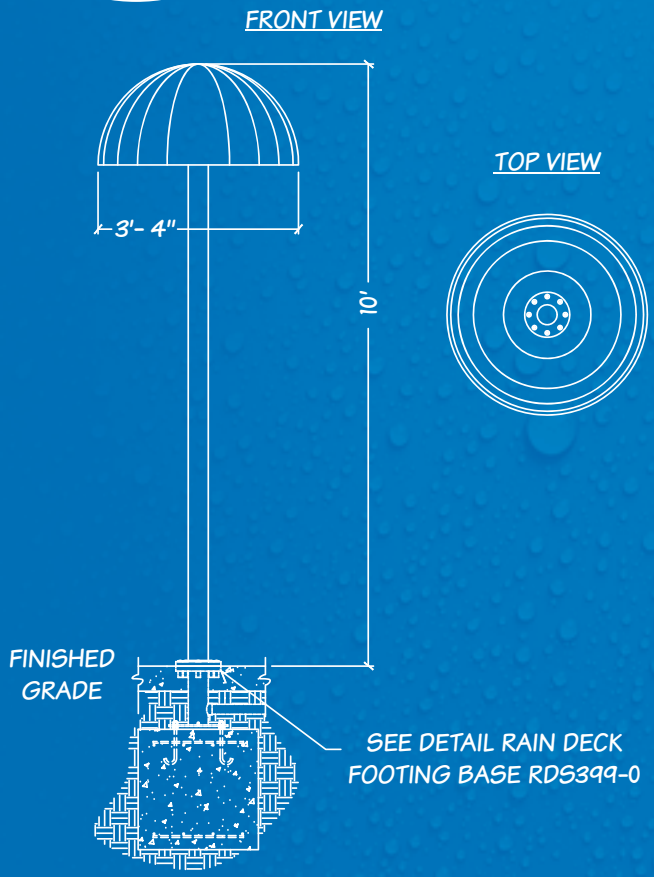

NAME	RDS302-0 SS Water Mushroom 40”
MATERIAL	Stainless Steel, Fiberglass
SURFACE FINISH	Powder Coat
FLOW RATE	10-90 GPM @ > 5 PSI
COMPATABLE WITH	RDS399-0

Water Mushroom 60”

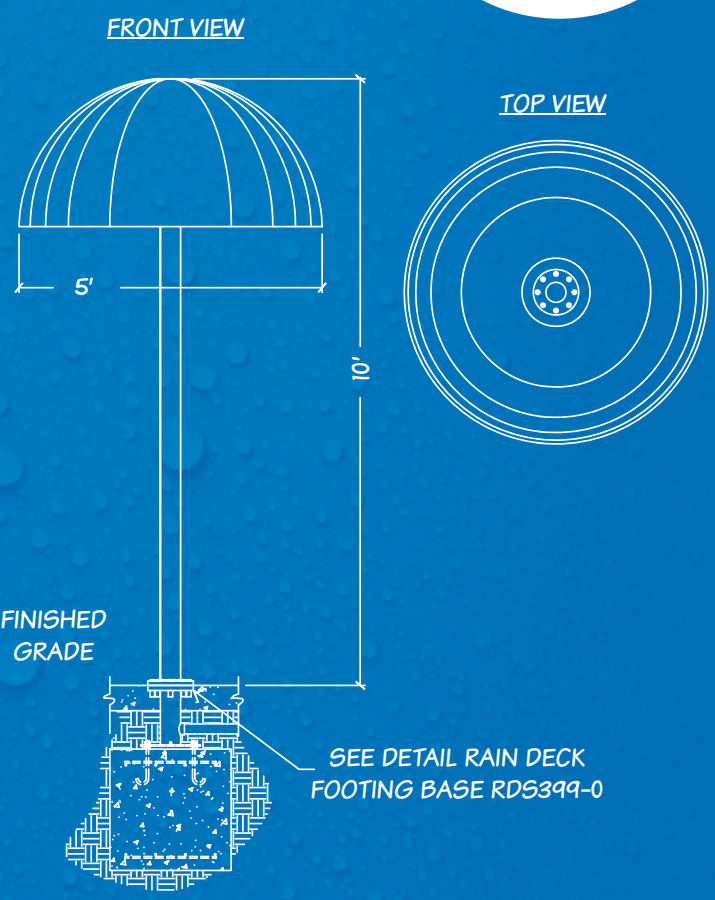

COMMERCIAL

NAME	RDS303-0 SS Water Mushroom 60”
MATERIAL	Stainless Steel, Fiberglass
SURFACE FINISH	Powder Coat
FLOW RATE	10-90 GPM @ > 5 PSI
COMPATABLE WITH	RDS399-0

Mini Mushroom

RDS304-0

COMMERCIAL

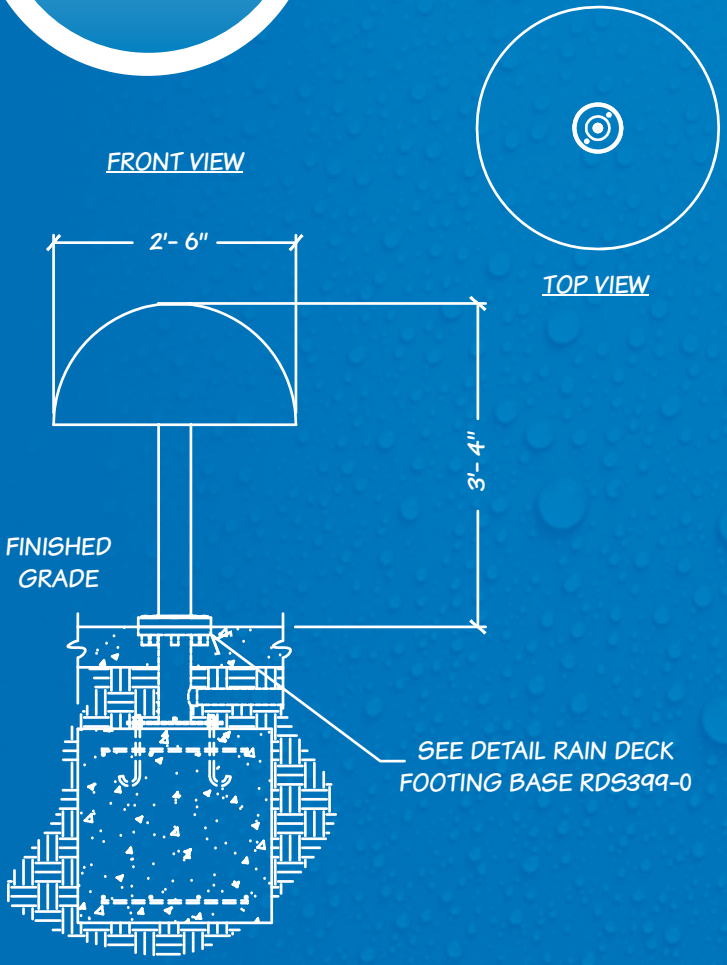

NAME	RDS304-0 SS Mini Mushroom
MATERIAL	Stainless Steel, Fiberglass
SURFACE FINISH	Powder Coat
FLOW RATE	5-20 GPM @ > 3 PSI
COMPATABLE WITH	RDS399-0

Rainy Arms 2

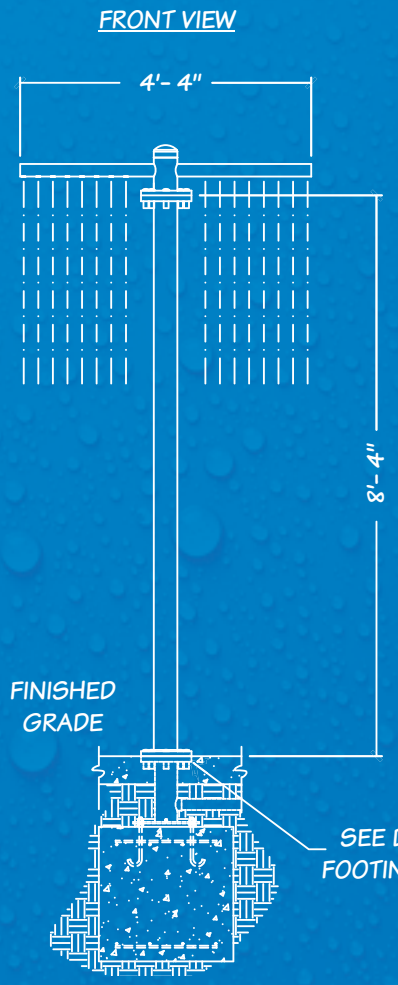

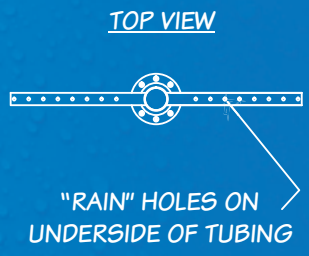

COMMERCIAL

NAME	RDS305-0 SS Rainy Arms 2
MATERIAL	Stainless Steel
SURFACE FINISH	Powder Coat
FLOW RATE	10-40 GPM @ > 5 PSI
COMPATABLE WITH	RDS399-0

Rainy Arms 3

RDS306-0

COMMERCIAL

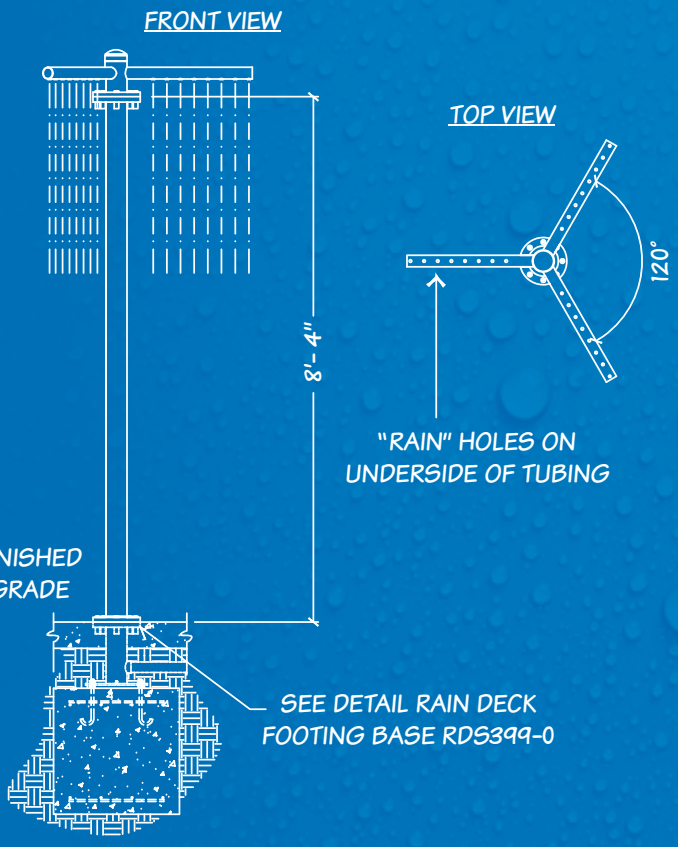

NAME	RDS306-0 SS Rainy Arms 3
MATERIAL	Stainless Steel
SURFACE FINISH	Powder Coat
FLOW RATE	15-60 GPM @ > 5 PSI
COMPATABLE WITH	RDS399-0

Rainy Arms 4

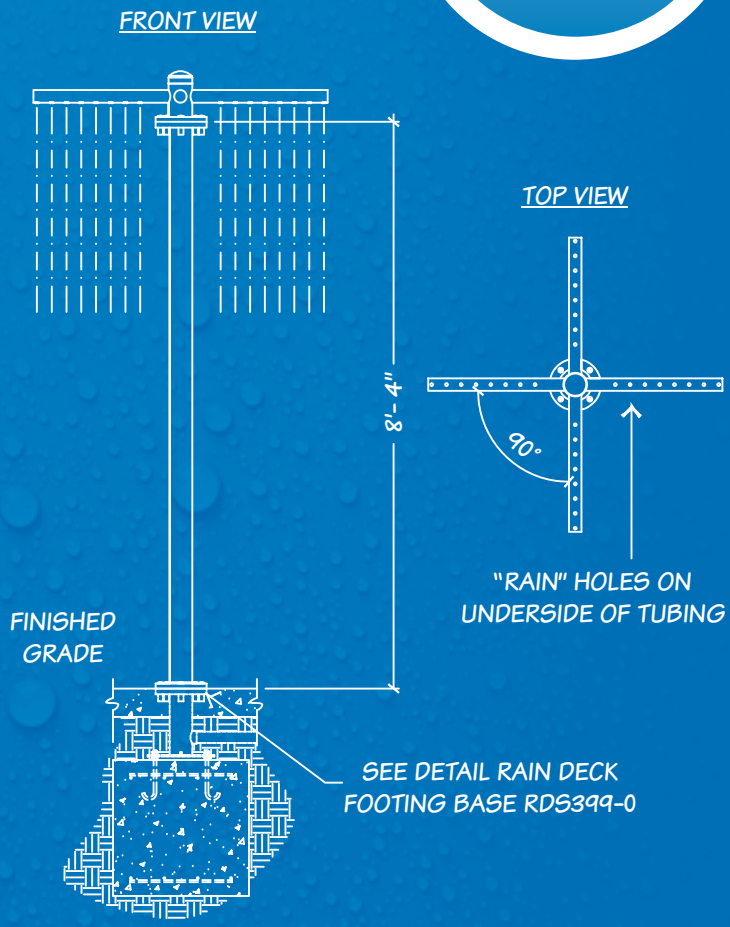

COMMERCIAL

NAME	RDS307-0 SS Rainy Arms 4
MATERIAL	Stainless Steel
SURFACE FINISH	Powder Coat
FLOW RATE	20-80 GPM @ > 5 PSI
COMPATABLE WITH	RDS399-0

Shower Arms 2

RDS308-0

COMMERCIAL

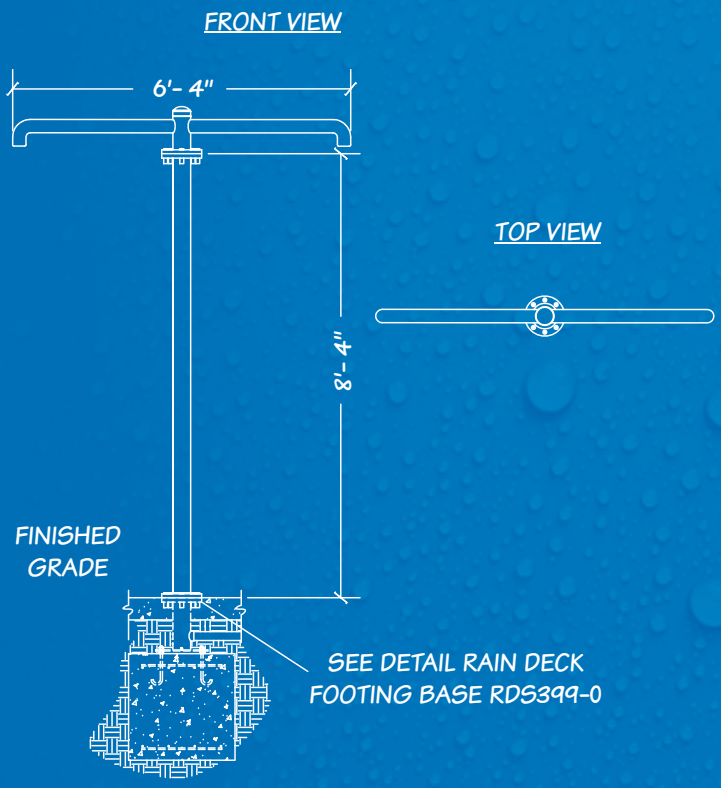

NAME	RDS308-0 SS Shower Arms 2
MATERIAL	Stainless Steel
SURFACE FINISH	Powder Coat
FLOW RATE	10-40 GPM @ > 5 PSI
COMPATABLE WITH	RDS399-0

Shower Arms 3

COMMERCIAL

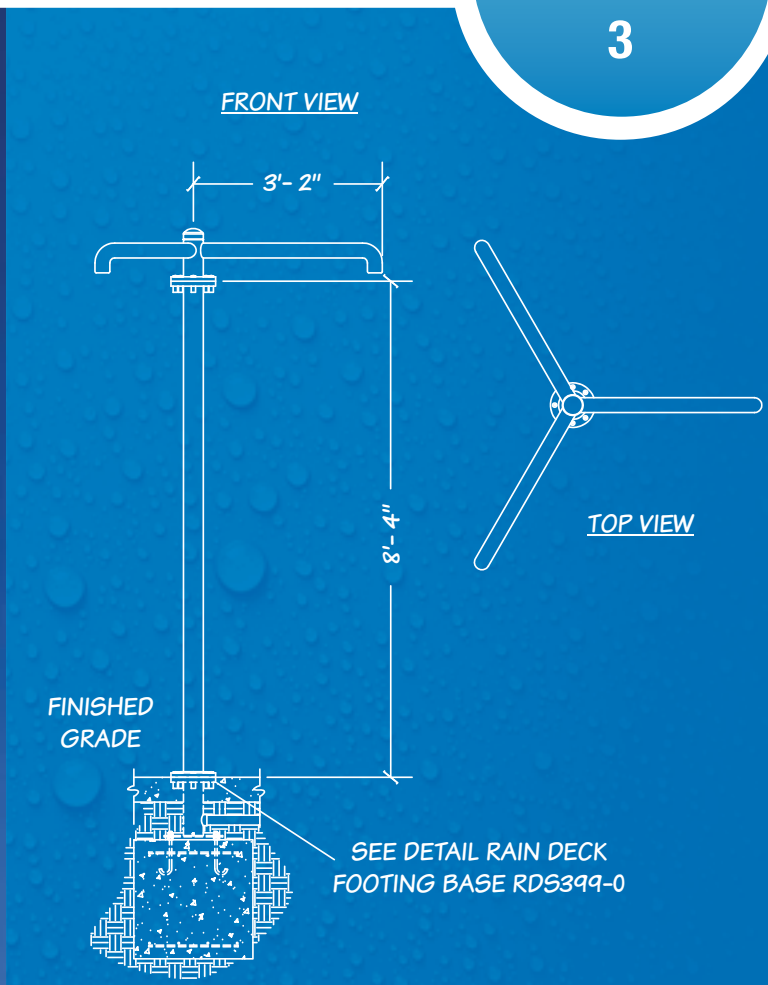

NAME	RDS309-0 SS Shower Arms 3
MATERIAL	Stainless Steel
SURFACE FINISH	Powder Coat
FLOW RATE	15-60 GPM @ > 5 PSI
COMPATABLE WITH	RDS399-0

Shower Arms 4

RDS310-0

COMMERCIAL

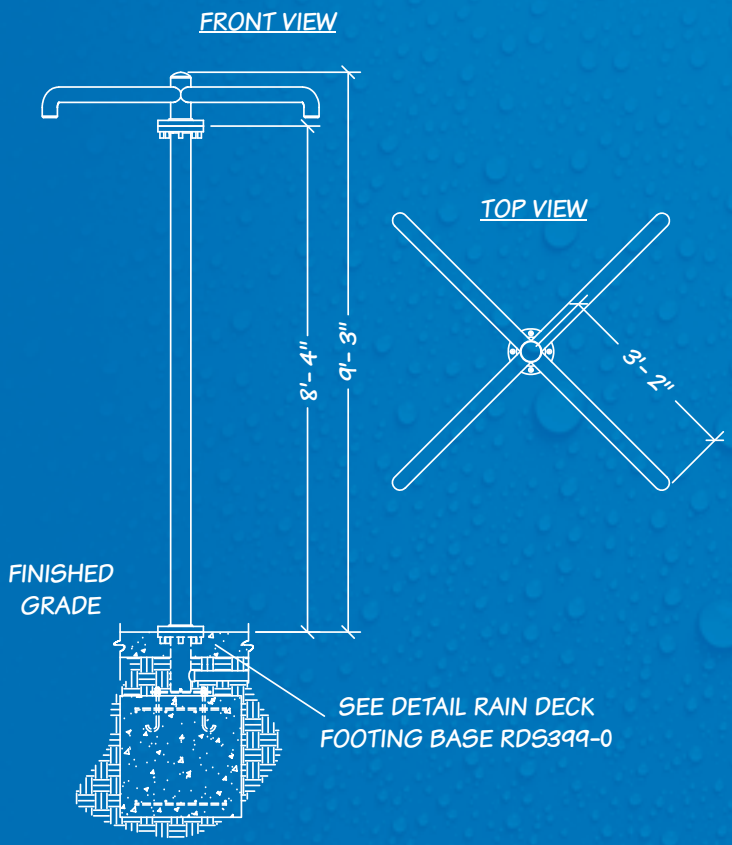

NAME	RDS310-0 SS Shower Arms 4
MATERIAL	Stainless Steel
SURFACE FINISH	Powder Coat
FLOW RATE	20-80 GPM @ > 5 PSI
COMPATABLE WITH	RDS399-0

Silly Arms 2

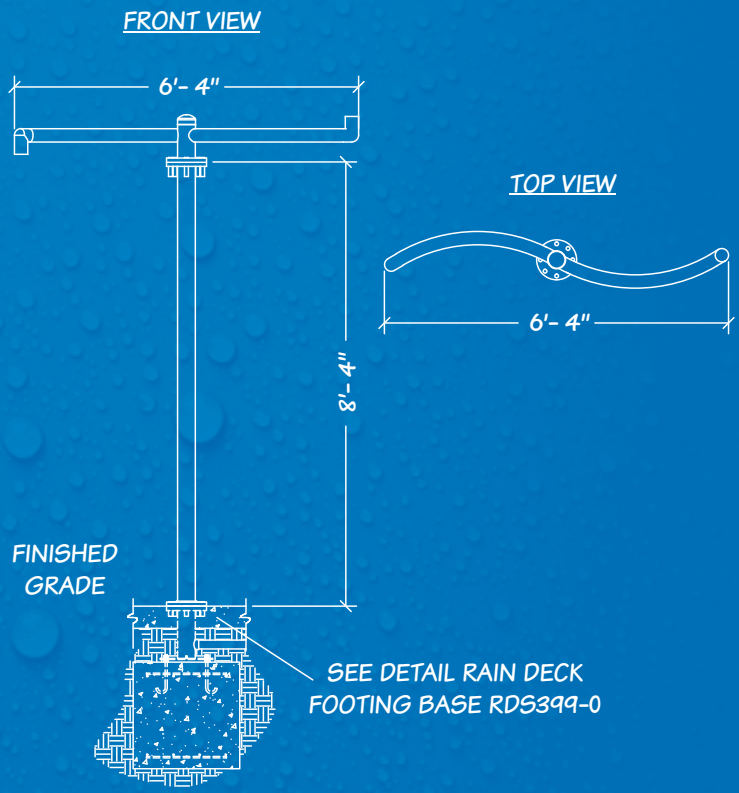

COMMERCIAL

NAME	RDS311-0 SS Silly Arms 2
MATERIAL	Stainless Steel
SURFACE FINISH	Powder Coat
FLOW RATE	10-40 GPM @ > 5 PSI
COMPATABLE WITH	RDS399-0

Silly Arms 3

RDS312-0

COMMERCIAL

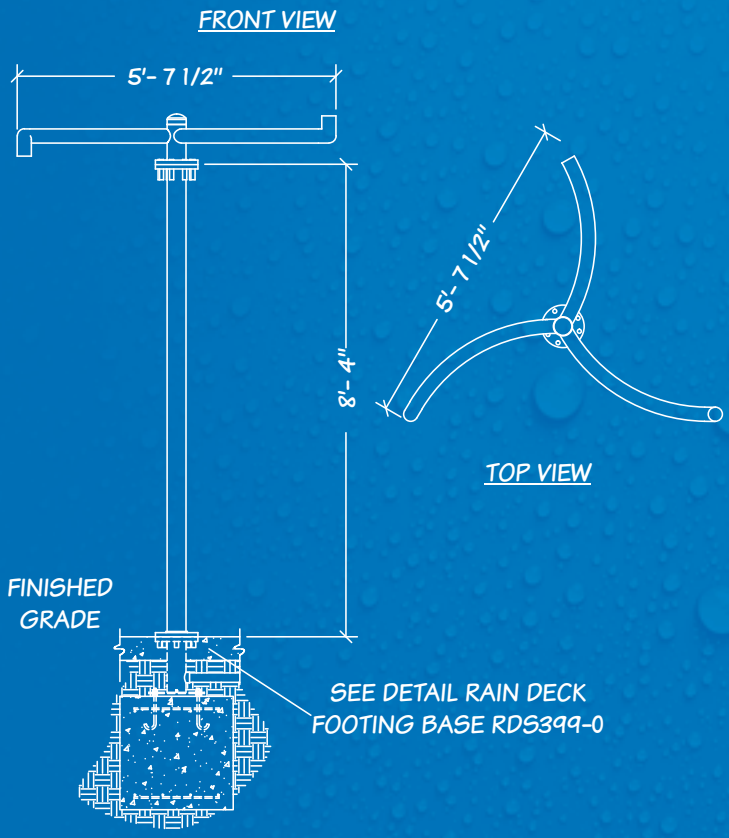

NAME	RDS312-0 SS Silly Arms 3
MATERIAL	Stainless Steel
SURFACE FINISH	Powder Coat
FLOW RATE	15-60 GPM @ > 5 PSI
COMPATABLE WITH	RDS399-0

Silly Arms 4

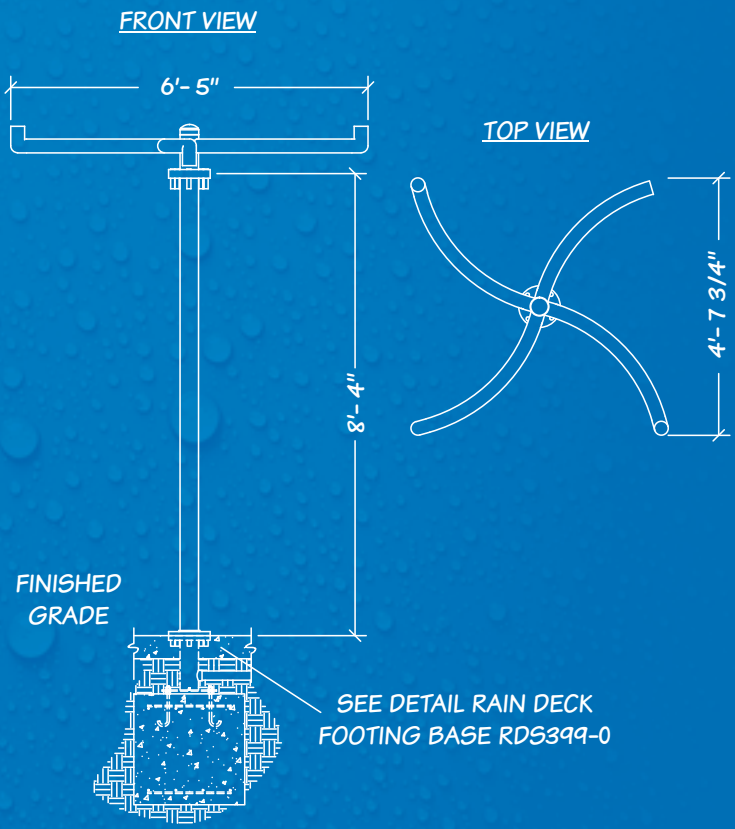

COMMERCIAL

NAME	RDS313-0 SS Silly Arms 4
MATERIAL	Stainless Steel
SURFACE FINISH	Powder Coat
FLOW RATE	20-80 GPM @ > 5 PSI
COMPATABLE WITH	RDS399-0

Dumping Bucket 1

RDS314-0

COMMERCIAL

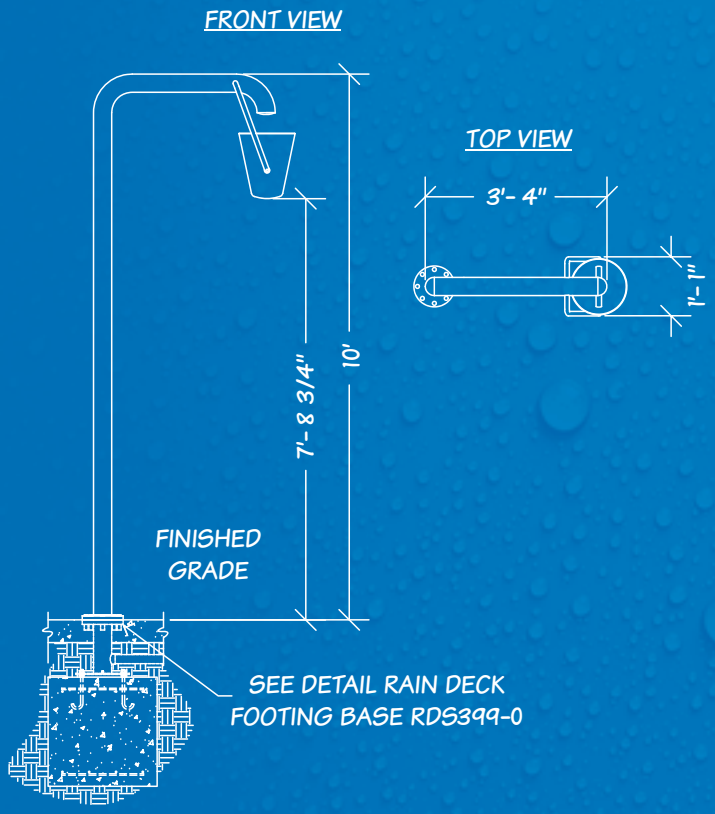

NAME	RDS314-0 SS Dumping Bucket 1
MATERIAL	Stainless Steel, Fiberglass
SURFACE FINISH	Powder Coat
FLOW RATE	5-10 GPM @ > 3-5 PSI
COMPATABLE WITH	RDS399-0

Dumping Bucket 2

COMMERCIAL

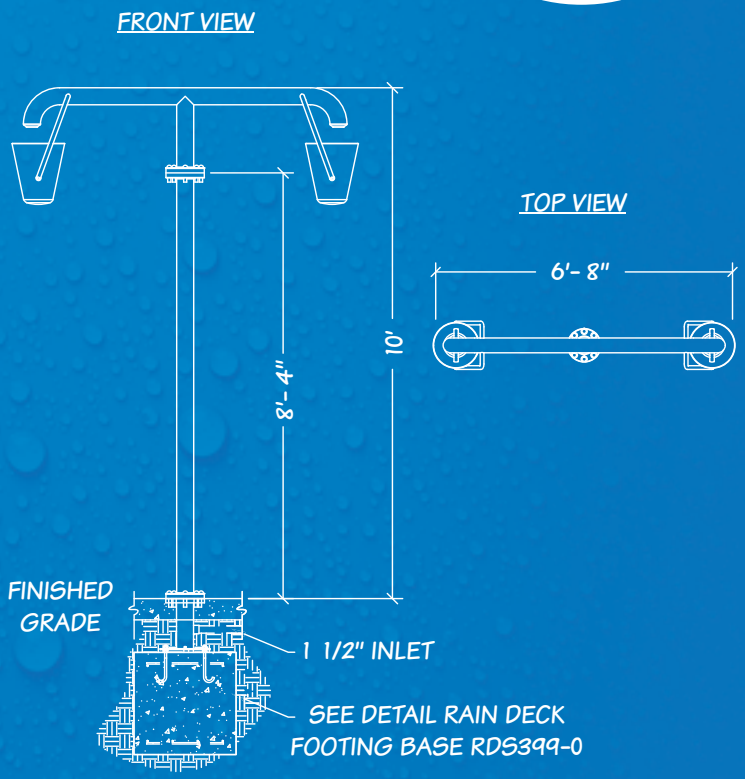

NAME	RDS315-0 SS Dumping Bucket 2
MATERIAL	Stainless Steel, Fiberglass
SURFACE FINISH	Powder Coat
FLOW RATE	10-20 GPM @ > 3-5 PSI
COMPATABLE WITH	RDS399-0

Dumping Bucket 3

RDS316-0

COMMERCIAL

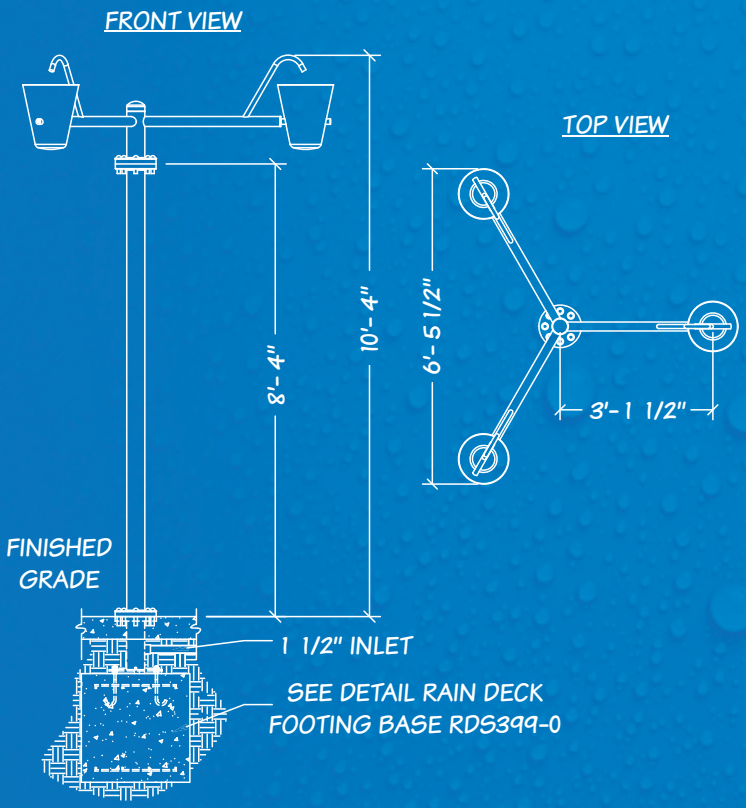

NAME	RDS316-0 SS Dumping Bucket 3
MATERIAL	Stainless Steel, Fiberglass
SURFACE FINISH	Powder Coat
FLOW RATE	15-30 GPM @ > 3-5 PSI
COMPATABLE WITH	RDS399-0

Dumping Bucket 4

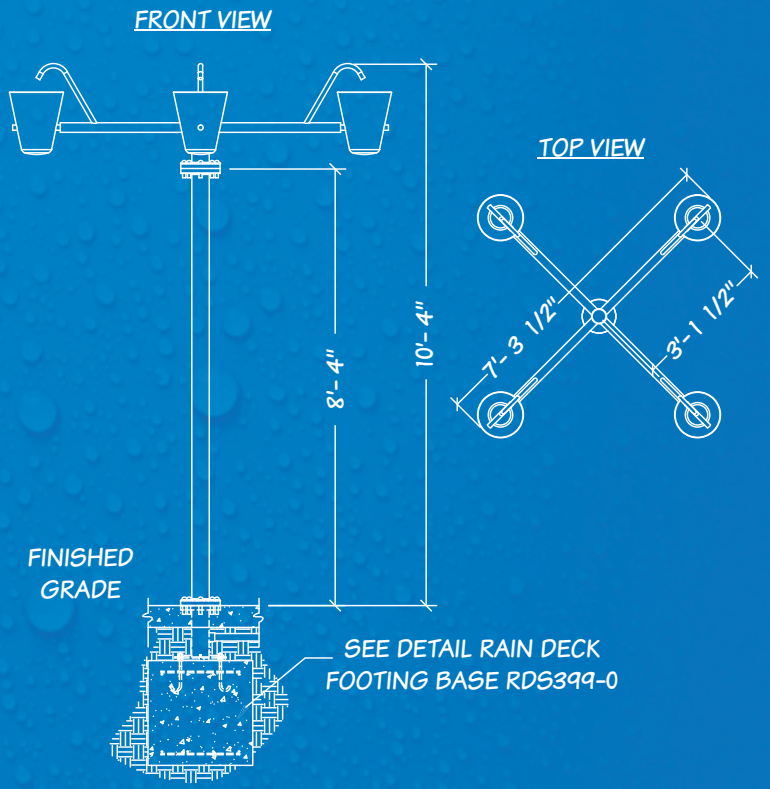

COMMERCIAL

NAME	RDS317-0 SS Dumping Bucket 4
MATERIAL	Stainless Steel, Fiberglass
SURFACE FINISH	Powder Coat
FLOW RATE	20-40 GPM @ > 3-5 PSI
COMPATABLE WITH	RDS399-0

Dumping Bucket 5

RDS318-0

COMMERCIAL

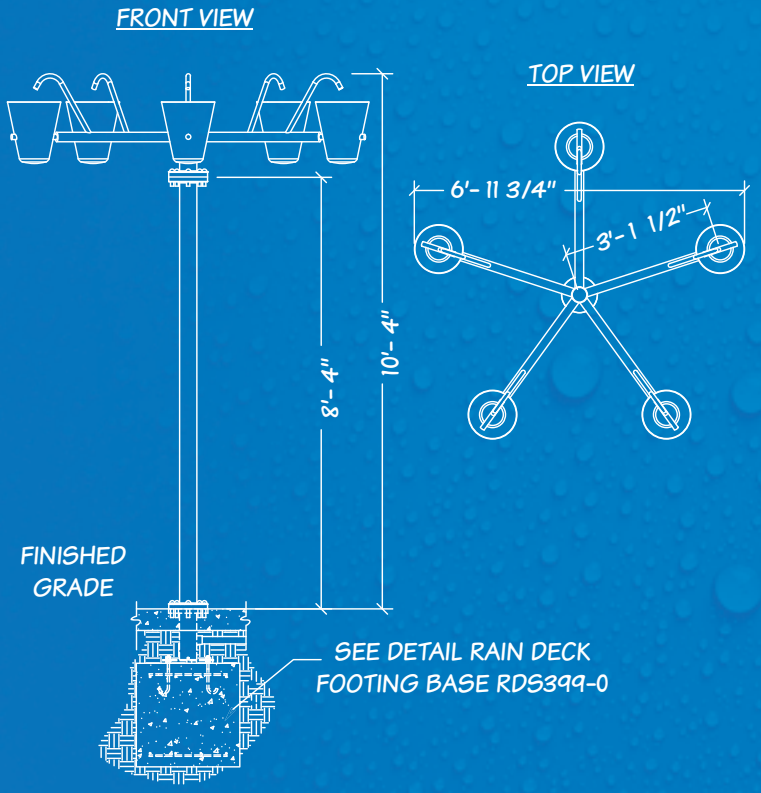

NAME	RDS318-0 SS Dumping Bucket 5
MATERIAL	Stainless Steel, Fiberglass
SURFACE FINISH	Powder Coat
FLOW RATE	25-50 GPM @ > 3-5 PSI
COMPATABLE WITH	RDS399-0

Waterfall Bucket 3

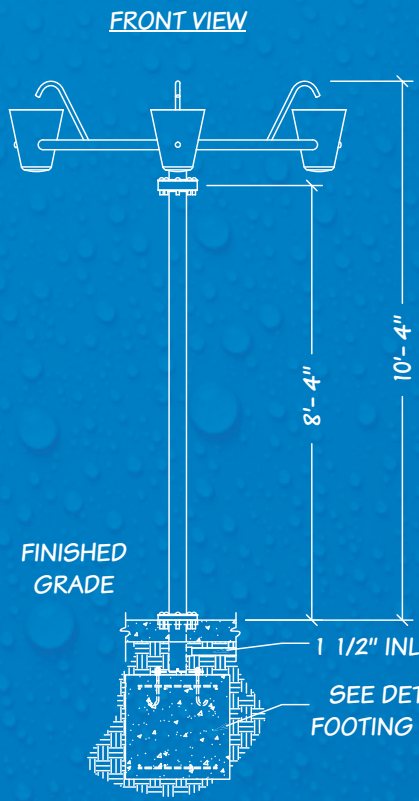

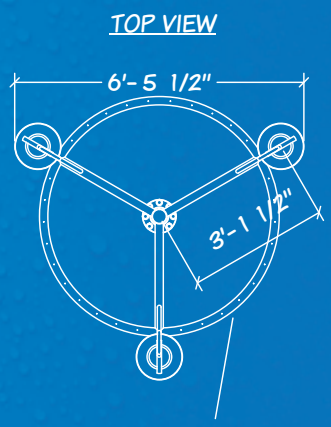

COMMERCIAL

NAME	RDS319-0 SS Waterfall Bucket 3
MATERIAL	Stainless Steel, Fiberglass
SURFACE FINISH	Powder Coat
FLOW RATE	20-40 GPM @ > 3-5 PSI
COMPATABLE WITH	RDS399-0

Waterfall Bucket 4

RDS320-0

COMMERCIAL

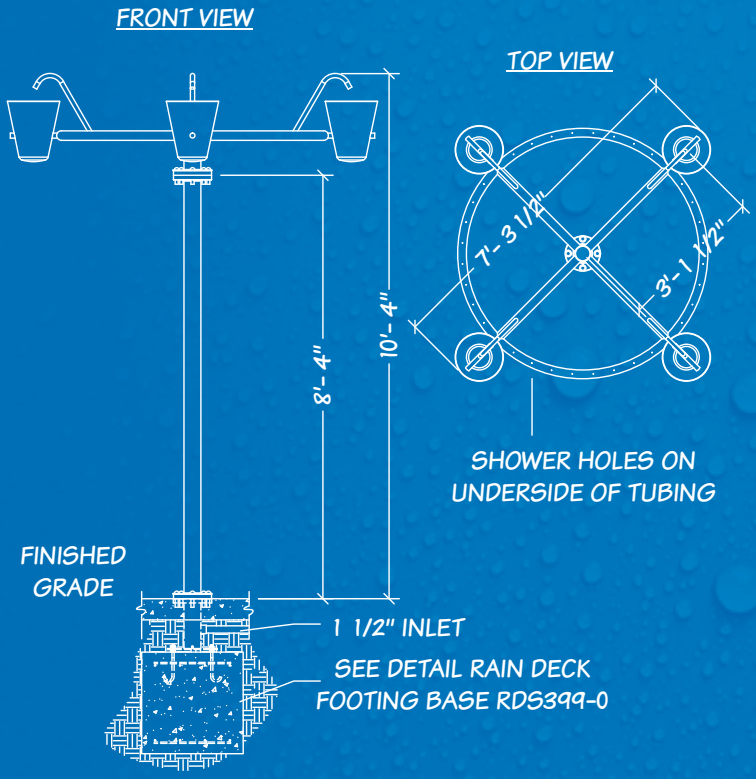

NAME	RDS320-0 SS Waterfall Bucket 4
MATERIAL	Stainless Steel, Fiberglass
SURFACE FINISH	Powder Coat
FLOW RATE	25-50 GPM @ > 3-5 PSI
COMPATABLE WITH	RDS399-0

Waterfall Bucket 5

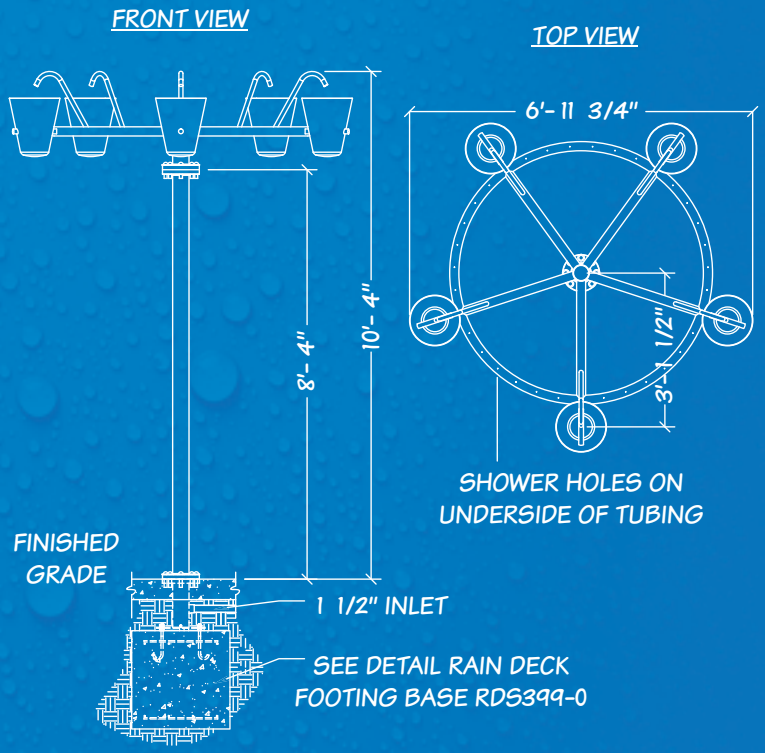

COMMERCIAL

NAME	RDS321-0 SS Waterfall Bucket 5
MATERIAL	Stainless Steel, Fiberglass
SURFACE FINISH	Powder Coat
FLOW RATE	30-60 GPM @ > 3-5 PSI
COMPATABLE WITH	RDS399-0

Rain Stick

RDS322-0

COMMERCIAL

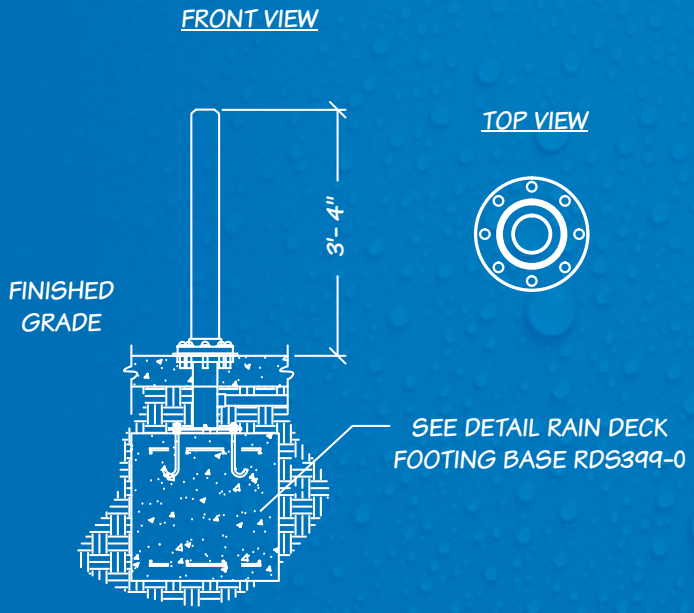

NAME	RDS322-0 SS Rain Stick
MATERIAL	Stainless Steel
SURFACE FINISH	Powder Coat
FLOW RATE	5-20 GPM @ > 5 PSI
COMPATABLE WITH	RDS399-0

Water Pillar

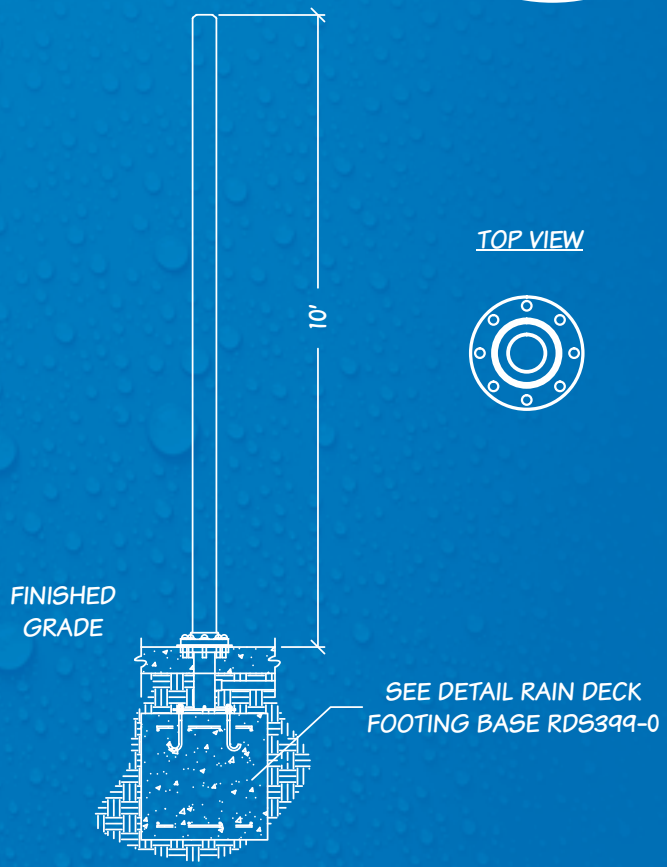

COMMERCIAL

NAME	RDS323-0 SS Waterfall Pillar
MATERIAL	Stainless Steel
SURFACE FINISH	Powder Coat
FLOW RATE	5-20 GPM @ > 5 PSI
COMPATABLE WITH	RDS399-0

Curvy Water Pillar

RDS323-1

COMMERCIAL

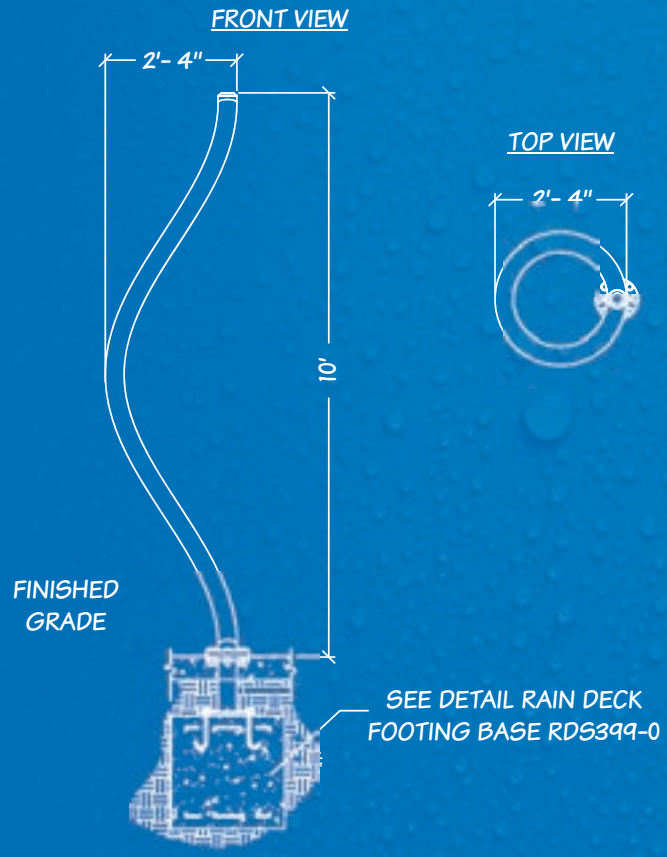

NAME	RDS323-1 SS Curvy Water Pillar
MATERIAL	Stainless Steel
SURFACE FINISH	Powder Coat
FLOW RATE	5-20 GPM @ > 5 PSI
COMPATABLE WITH	RDS399-0

Misty Pillar

FRONT VIEW

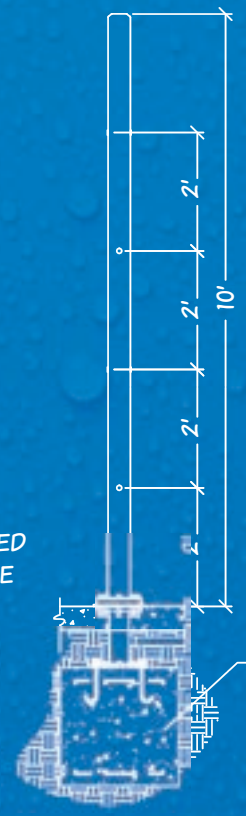

TOP VIEW

COMMERCIAL

NAME	RDS324-0 SS Misty Pillar
MATERIAL	Stainless Steel
SURFACE FINISH	Powder Coat
FLOW RATE	12-16 GPM @ > 10 PSI
COMPATABLE WITH	RDS399-0

Curvy Misty Pillar

RDS324-1

COMMERCIAL

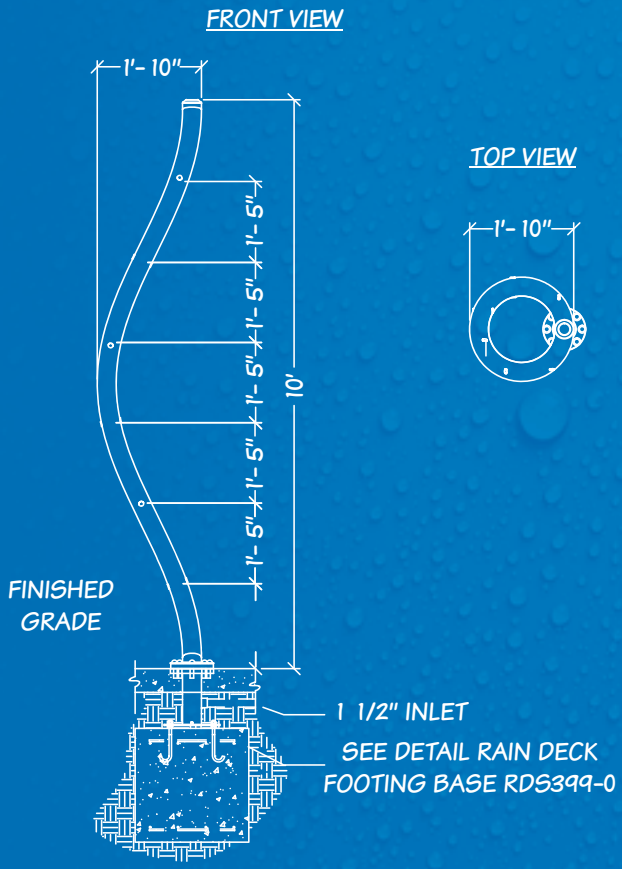

NAME	RDS324-1 SS Curvy Misty Pillar
MATERIAL	Stainless Steel
SURFACE FINISH	Powder Coat
FLOW RATE	15-20 GPM @ > 10 PSI
COMPATABLE WITH	RDS399-0

Spray Plate Post

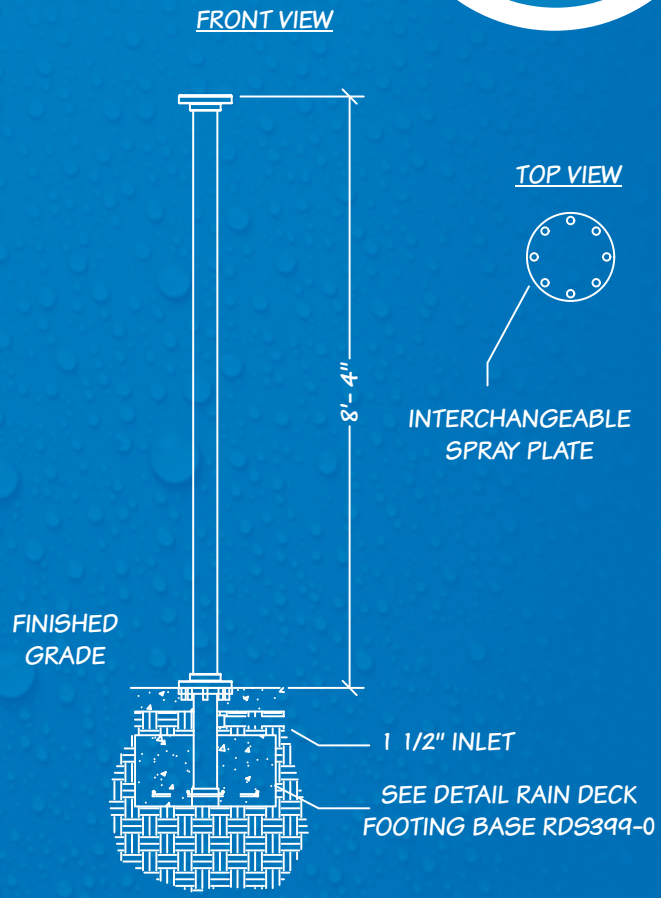

COMMERCIAL

NAME	RDS325-0 SS Spray Plate Post
MATERIAL	Stainless Steel
SURFACE FINISH	Powder Coat
FLOW RATE	5-30 GPM @ > 5 PSI
COMPATABLE WITH	RDS399-0

Misty Bucket Arch

RDS326-0

COMMERCIAL

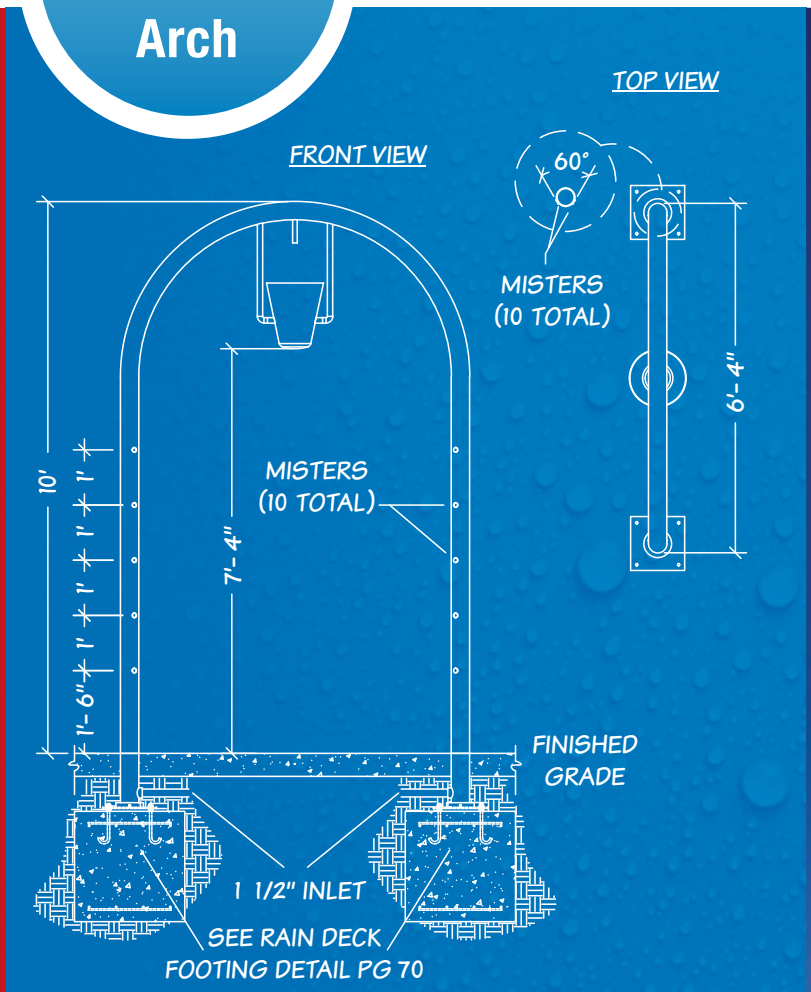

NAME	RDS326-0 SS Misty Bucket Arch
MATERIAL	Stainless Steel, Fiberglass
SURFACE FINISH	Powder Coat
FLOW RATE	25-50 GPM @ > 3-5 PSI
COMPATABLE WITH	Underground Footing Only

Fire Hydrant

TOP VIEW

FRONT VIEW

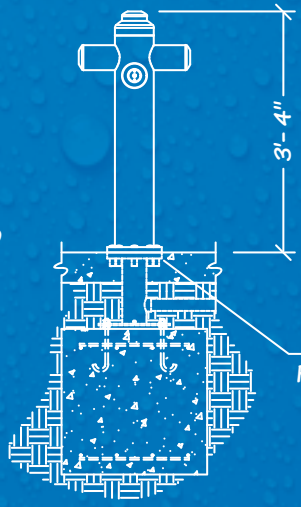

COMMERCIAL

NAME	RDS327-0 SS Fire Hydrant
MATERIAL	Stainless Steel
SURFACE FINISH	Powder Coat
FLOW RATE	15-35 GPM @ > 5 PSI
COMPATABLE WITH	RDS399-0

Water Cactus

RDS328-0

COMMERCIAL

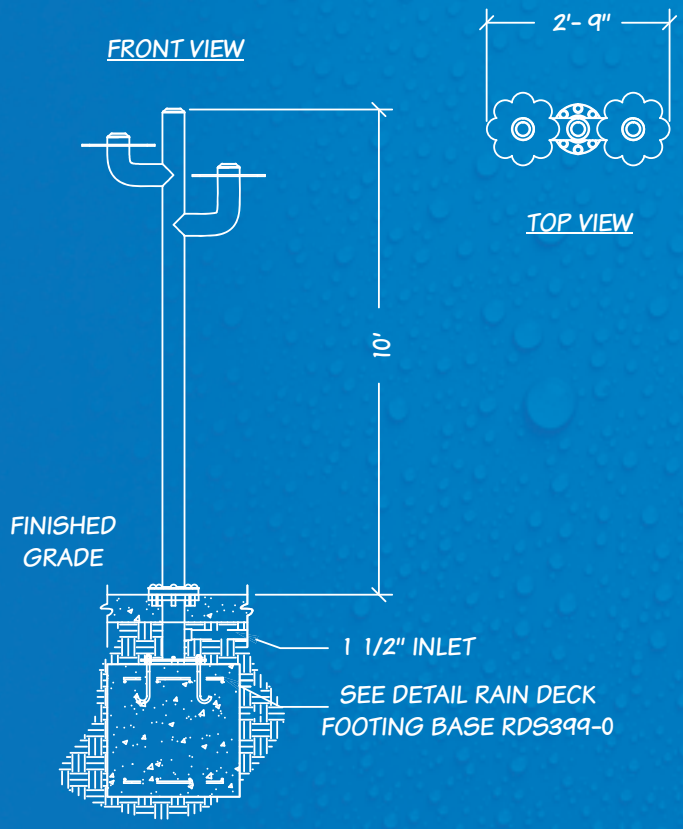

NAME	RDS328-0 SS Water Cactus
MATERIAL	Stainless Steel, Aluminum or Acrylic
SURFACE FINISH	Powder Coat
FLOW RATE	15-60 GPM @ > 5 PSI
COMPATABLE WITH	RDS399-0

Water Wheel 1

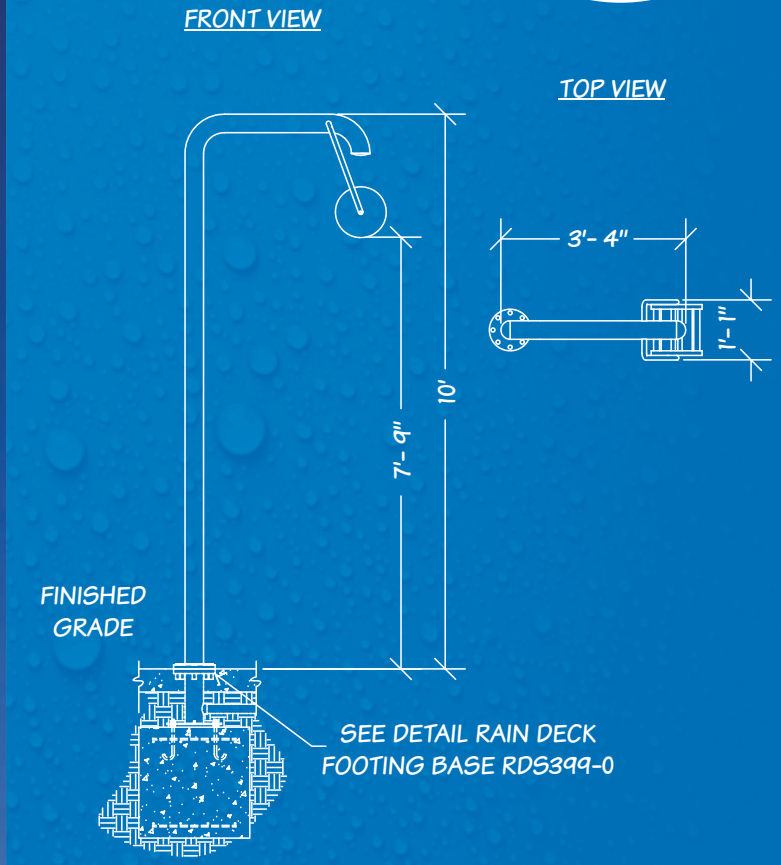

COMMERCIAL

NAME	RDS329-0 SS Water Wheel 1
MATERIAL	Stainless Steel, Aluminum
SURFACE FINISH	Powder Coat
FLOW RATE	8-20 GPM @ > 3 PSI
COMPATABLE WITH	RDS399-0

Water Wheel 2

RDS330-0

COMMERCIAL

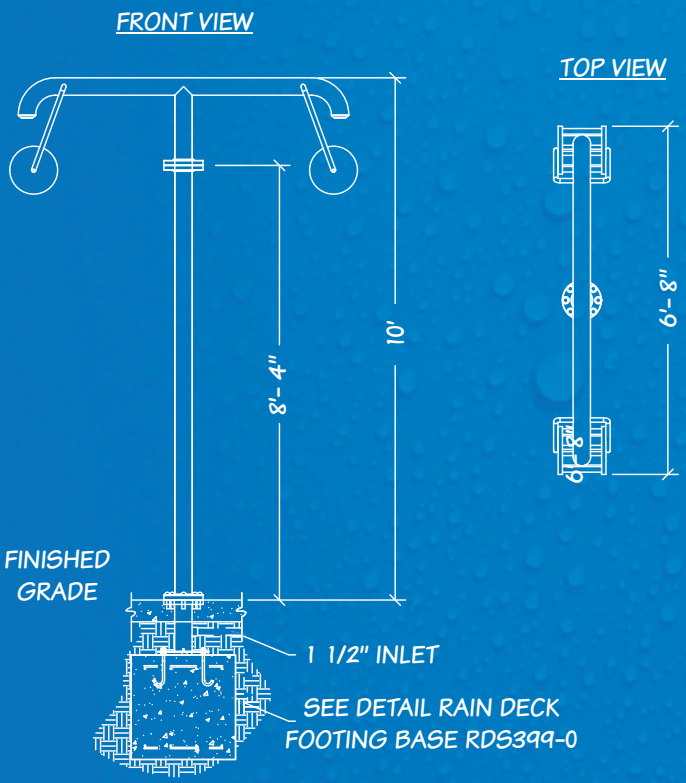

NAME	RDS330-0 SS Water Wheel 2
MATERIAL	Stainless Steel, Aluminum
SURFACE FINISH	Powder Coat
FLOW RATE	16-40 GPM @ > 3 PSI
COMPATABLE WITH	RDS399-0

Rain Curtain

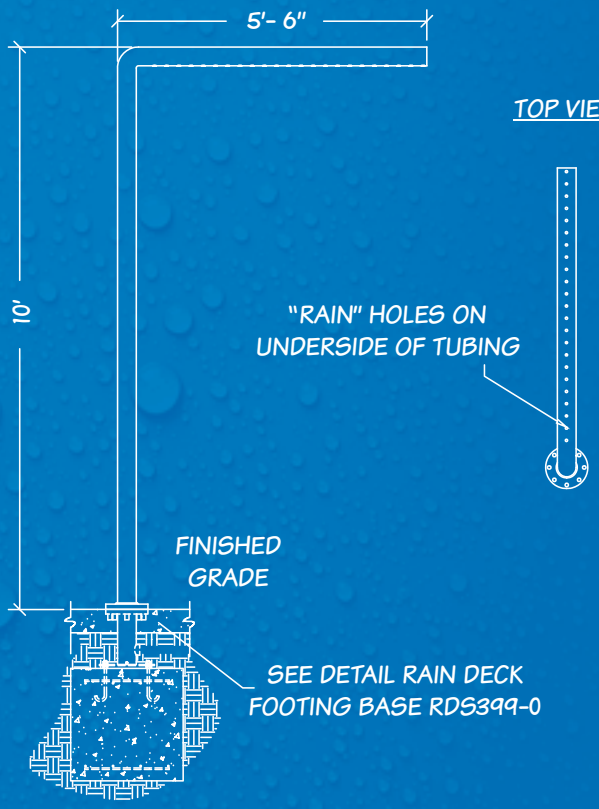

COMMERCIAL

NAME	RDS331-0 SS Rain Curtain
MATERIAL	Stainless Steel
SURFACE FINISH	Powder Coat
FLOW RATE	5-20 GPM @ > 5 PSI
COMPATABLE WITH	RDS399-0

Water Fall

RDS332-0

COMMERCIAL

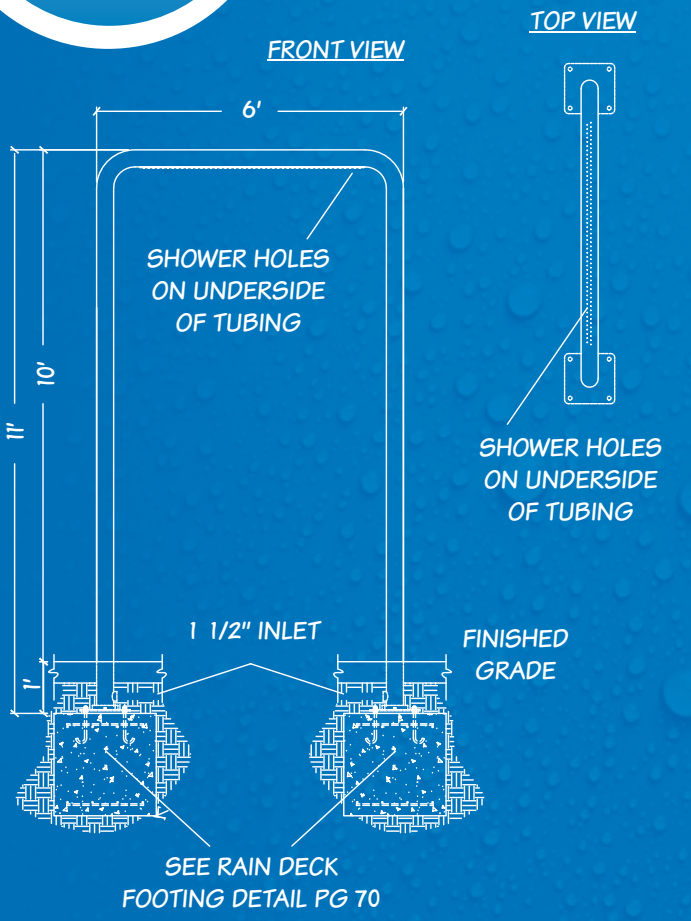

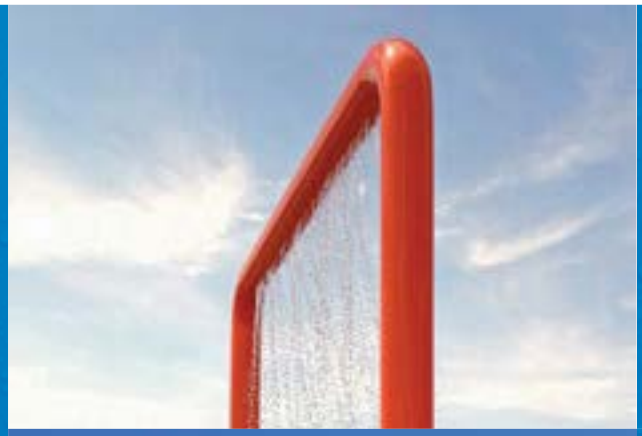

NAME	RDS332-0 SS Water Fall
MATERIAL	Stainless Steel
SURFACE FINISH	Powder Coat
FLOW RATE	5-20 GPM @ > 5 PSI
COMPATABLE WITH	Underground Footing Only

Water Fall Trough

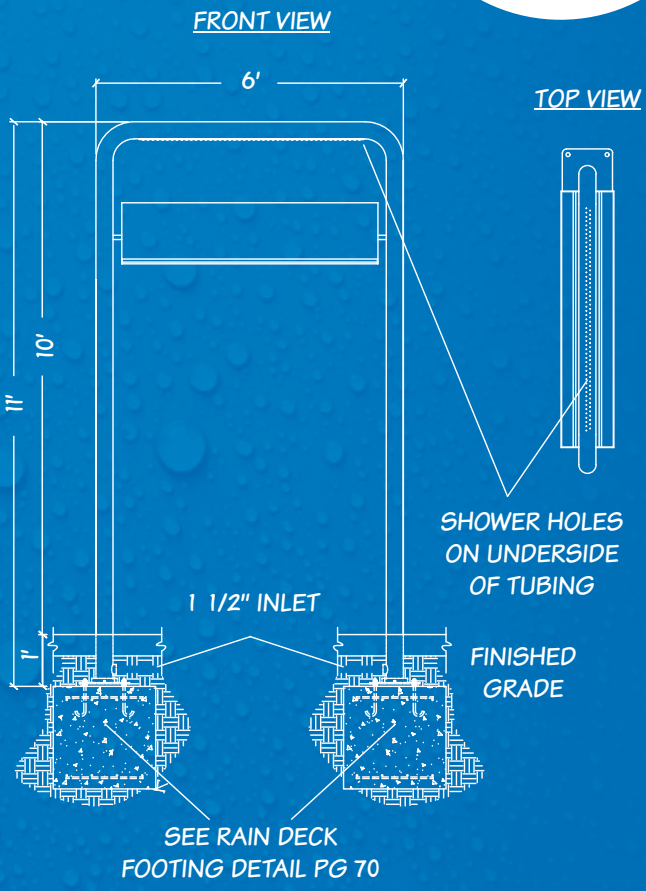

COMMERCIAL

NAME	RDS333-0 SS Water Fall Trough
MATERIAL	Stainless Steel, Aluminum
SURFACE FINISH	Powder Coat
FLOW RATE	5-20 GPM @ > 5 PSI
COMPATABLE WITH	Underground Footing Only

Water Flower

RDS334-0

COMMERCIAL

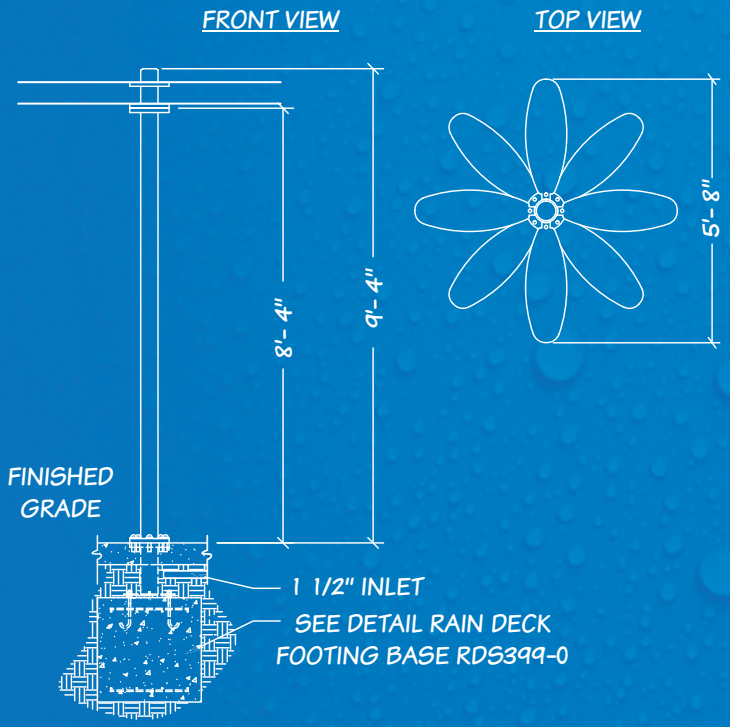

NAME	RDS334-0 SS Water Flower
MATERIAL	Stainless Steel, Aluminum
SURFACE FINISH	Powder Coat
FLOW RATE	5-20 GPM @ > 3 PSI
COMPATABLE WITH	RDS399-0

Wavy Water Flower

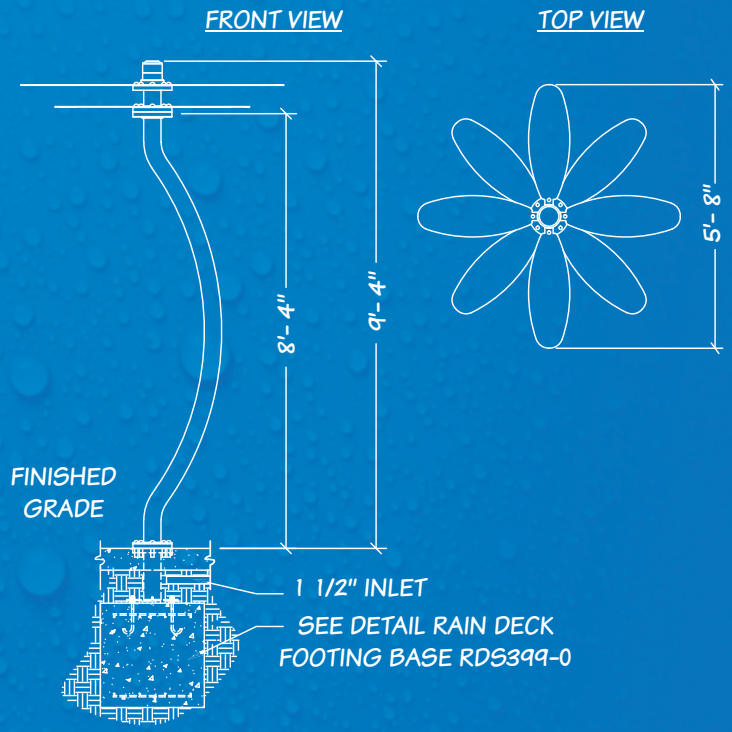

COMMERCIAL

NAME	RDS334-1 SS Wavy Water Flower
MATERIAL	Stainless Steel, Aluminum
SURFACE FINISH	Powder Coat
FLOW RATE	5-20 GPM @ > 5 PSI
COMPATABLE WITH	RDS399-0

Flower Shower 2

RDS335-0

COMMERCIAL

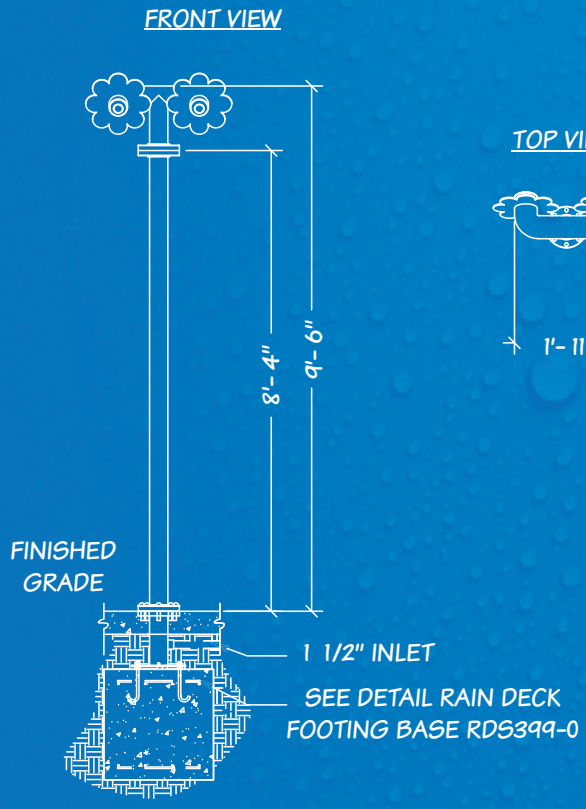

NAME	RDS335-0 SS Flower Shower 2
MATERIAL	Stainless Steel, Aluminum or Acrylic
SURFACE FINISH	Powder Coat
FLOW RATE	8-20 GPM @ > 5 PSI
COMPATABLE WITH	RDS399-0

Flower Shower 3

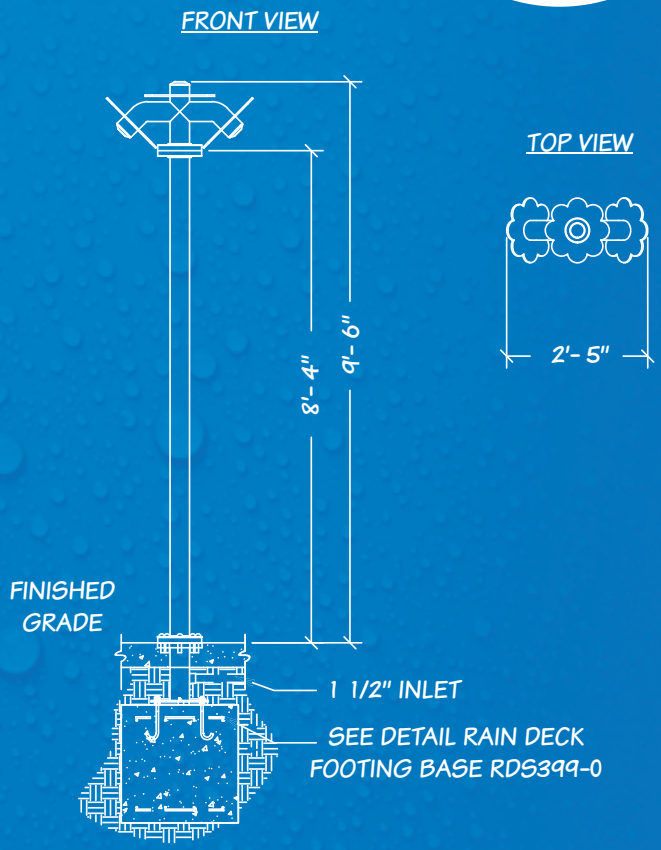

COMMERCIAL

NAME	RDS336-0 SS Flower Shower 3
MATERIAL	Stainless Steel, Aluminum or Acrylic
SURFACE FINISH	Powder Coat
FLOW RATE	12-30 GPM @ > 5 PSI
COMPATABLE WITH	RDS399-0

Flower Shower 4

RDS337-0

COMMERCIAL

FRONT VIEW

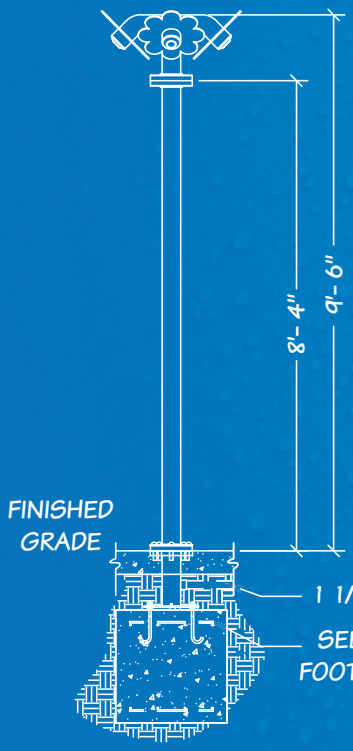

TOP VIEW

NAME	RDS337-0 SS Flower Shower 4
MATERIAL	Stainless Steel, Aluminum or Acrylic
SURFACE FINISH	Powder Coat
FLOW RATE	16-35 GPM @ > 5 PSI
COMPATABLE WITH	RDS399-0

Palm Tree

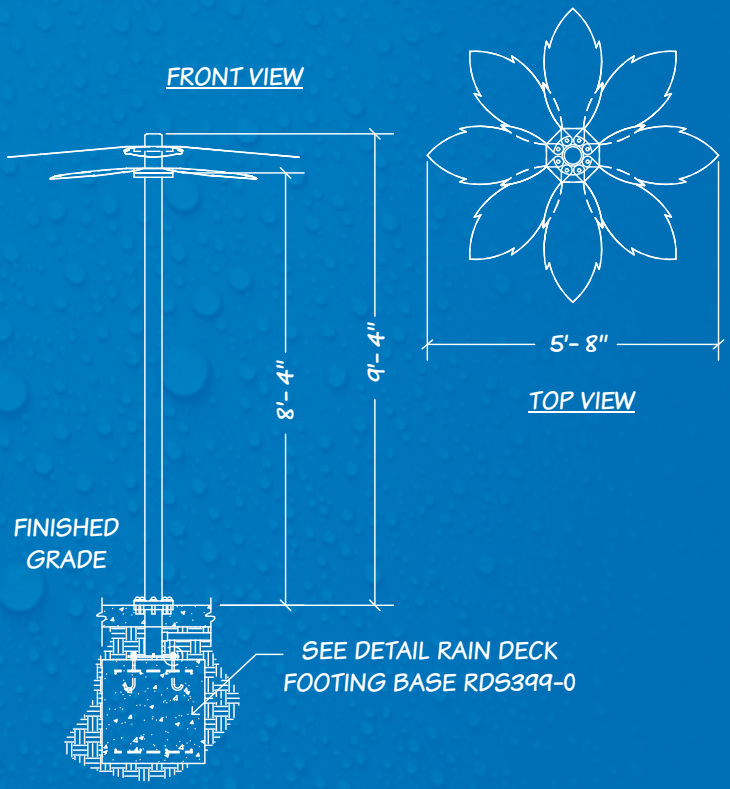

COMMERCIAL

NAME	RDS339-0 SS Palm Tree
MATERIAL	Stainless Steel, Aluminum
SURFACE FINISH	Powder Coat
FLOW RATE	5-20 GPM @ > 5 PSI
COMPATABLE WITH	RDS399-0

Wavy Palm Tree

RDS339-1

COMMERCIAL

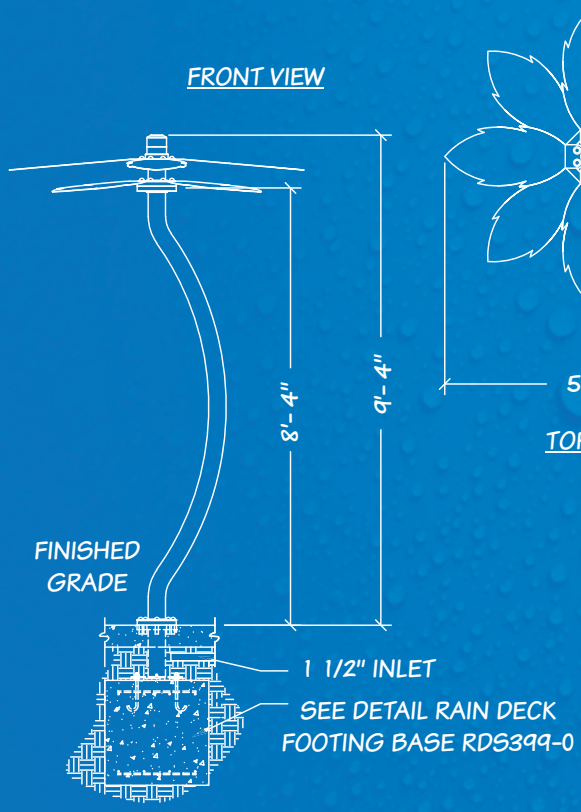

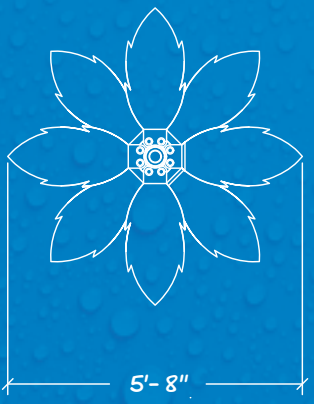

NAME	RDS339-1 SS Wavy Palm Tree
MATERIAL	Stainless Steel, Aluminum
SURFACE FINISH	Powder Coat
FLOW RATE	5-20 GPM @ > 5 PSI
COMPATABLE WITH	RDS399-0

Shower Sprayer

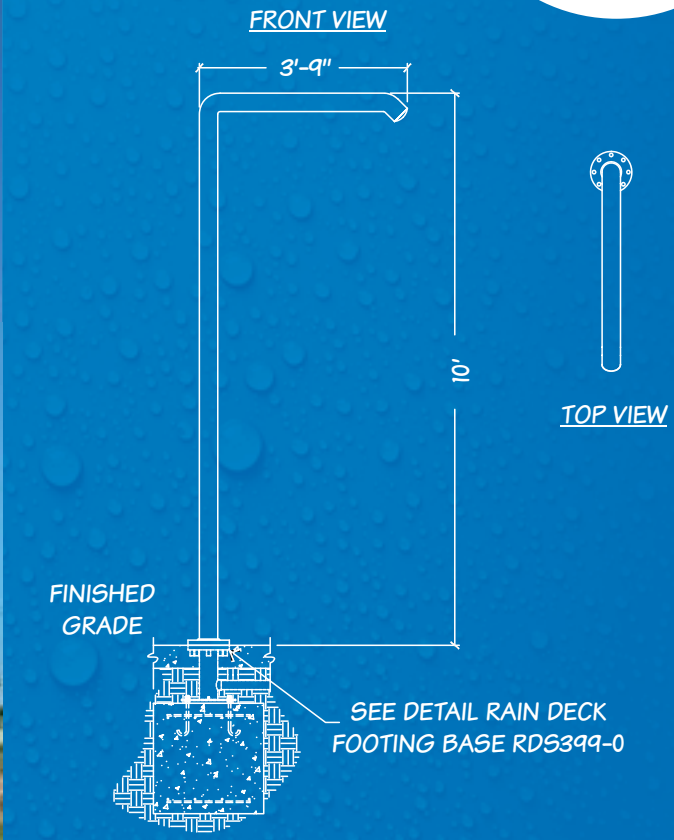

COMMERCIAL

NAME	RDS340-0 SS Shower Sprayer
MATERIAL	Stainless Steel
SURFACE FINISH	Powder Coat
FLOW RATE	5-20 GPM @ > 5 PSI
COMPATABLE WITH	RDS399-0

Water Loop 6’

RDS341-0

COMMERCIAL

TOP VIEW

FRONT VIEW

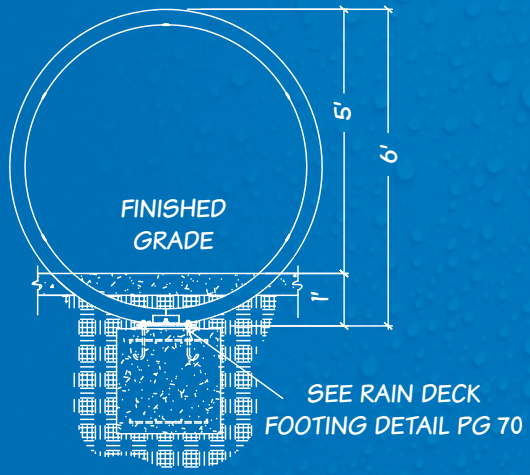

NAME	RDS341-0 SS Water Loop 6’
MATERIAL	Stainless Steel
SURFACE FINISH	Powder Coat
FLOW RATE	7-8 GPM @ > 10 PSI
COMPATABLE WITH	Underground Footing Only

Water Loop 6' Set

TOP VIEW

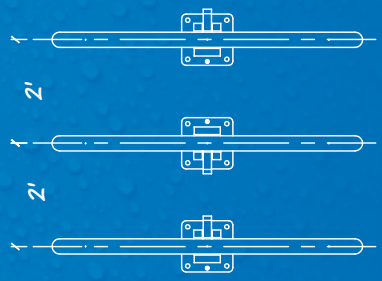

FRONT VIEW

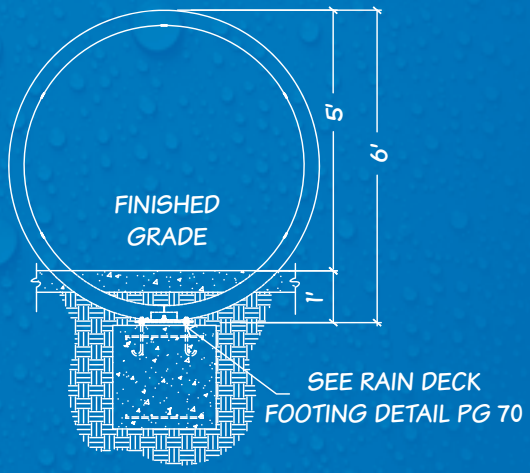

COMMERCIAL

NAME	RDS342-0 SS Water Loop 6' Set (3)
MATERIAL	Stainless Steel
SURFACE FINISH	Powder Coat
FLOW RATE	20-25 GPM @ > 10 PSI
COMPATABLE WITH	Underground Footing Only

Frog Loop

RDS343-0

COMMERCIAL

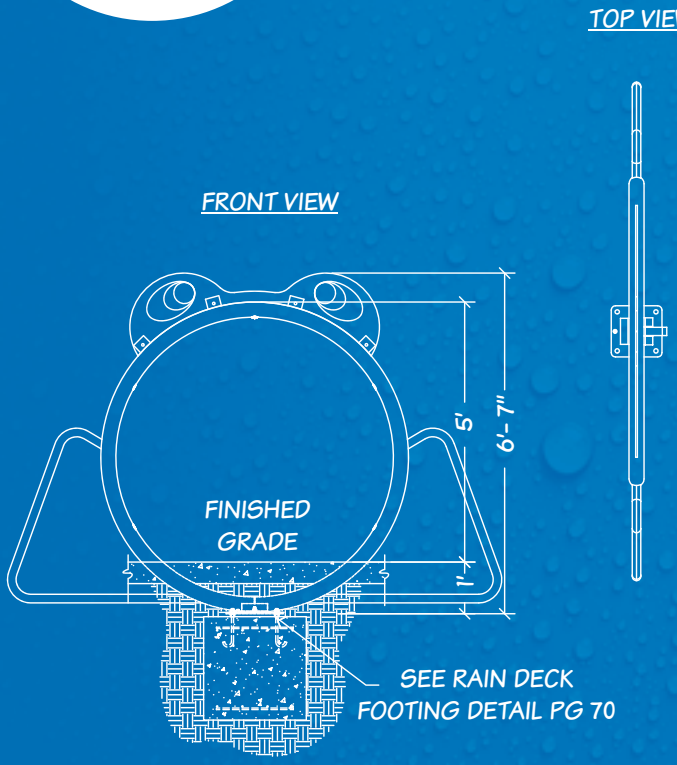

NAME	RDS343-0 SS Frog Loop
MATERIAL	Stainless Steel, Aluminum
SURFACE FINISH	Powder Coat
FLOW RATE	7-8 GPM @ > 10 PSI
COMPATABLE WITH	Underground Footing Only

Water Arch

TOP VIEW

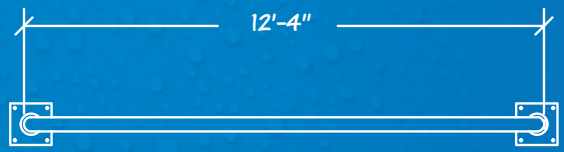

FRONT VIEW

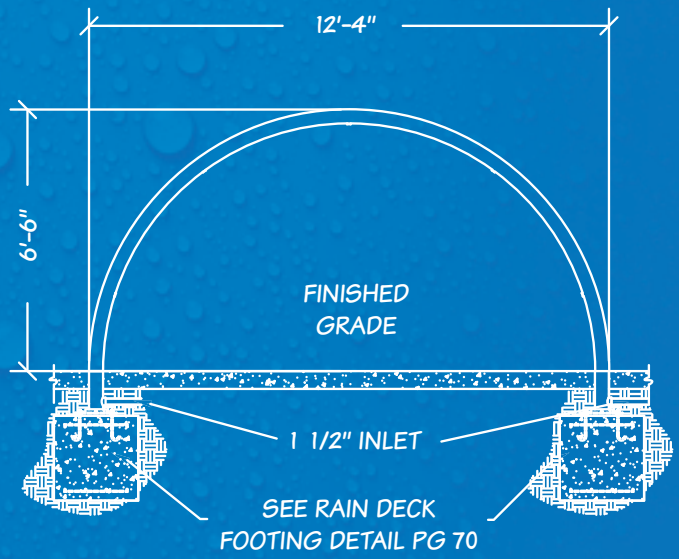

COMMERCIAL

NAME	RDS344-0 SS Water Arch
MATERIAL	Stainless Steel
SURFACE FINISH	Powder Coat
FLOW RATE	7-8 GPM @ > 10 PSI
COMPATABLE WITH	Underground Footing Only

Water Arch Set

RDS345-0

COMMERCIAL

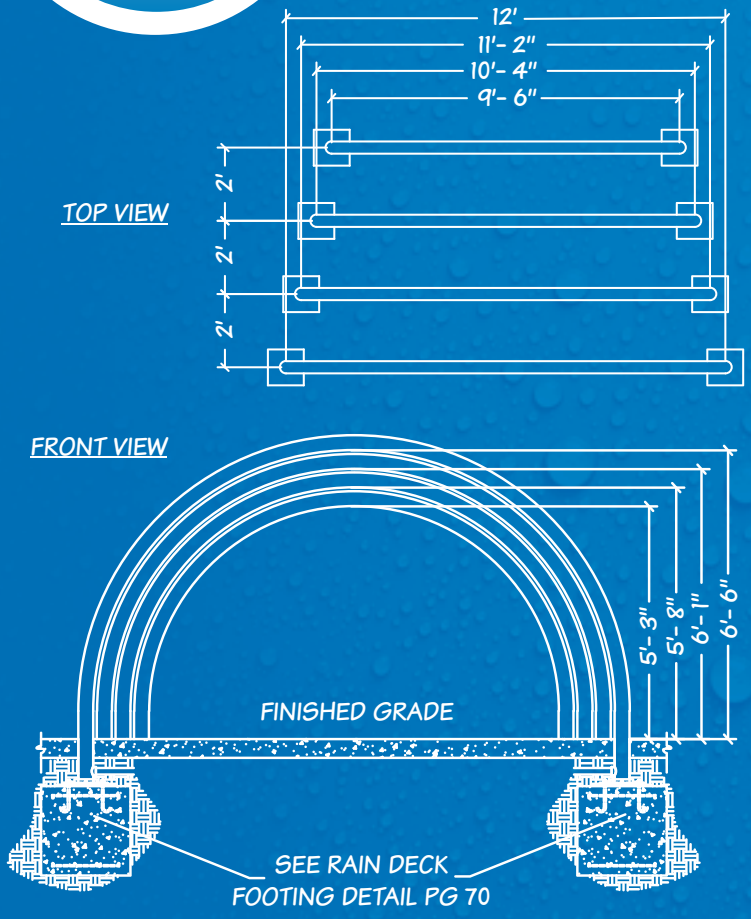

NAME	RDS345-0 SS Water Arch Set
MATERIAL	Stainless Steel
SURFACE FINISH	Powder Coat
FLOW RATE	28-32 GPM @ > 10 PSI
COMPATABLE WITH	Underground Footing Only

Arch Way

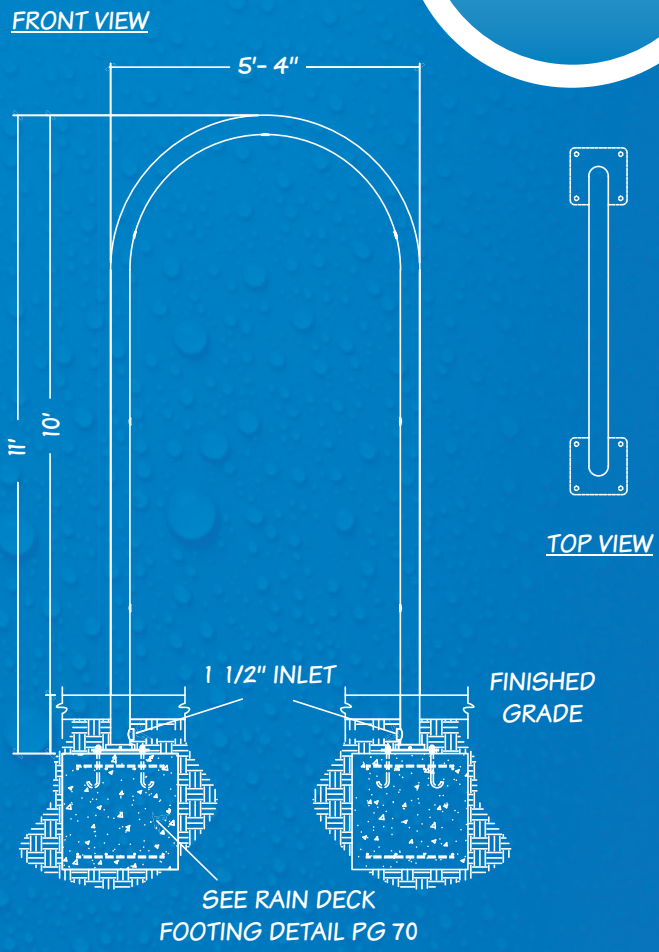

COMMERCIAL

NAME	RDS346-0 SS Arch Way
MATERIAL	Stainless Steel
SURFACE FINISH	Powder Coat
FLOW RATE	13-18 GPM @ > 10 PSI
COMPATABLE WITH	Underground Footing Only

Rain Blaster

RDS347-0

COMMERCIAL

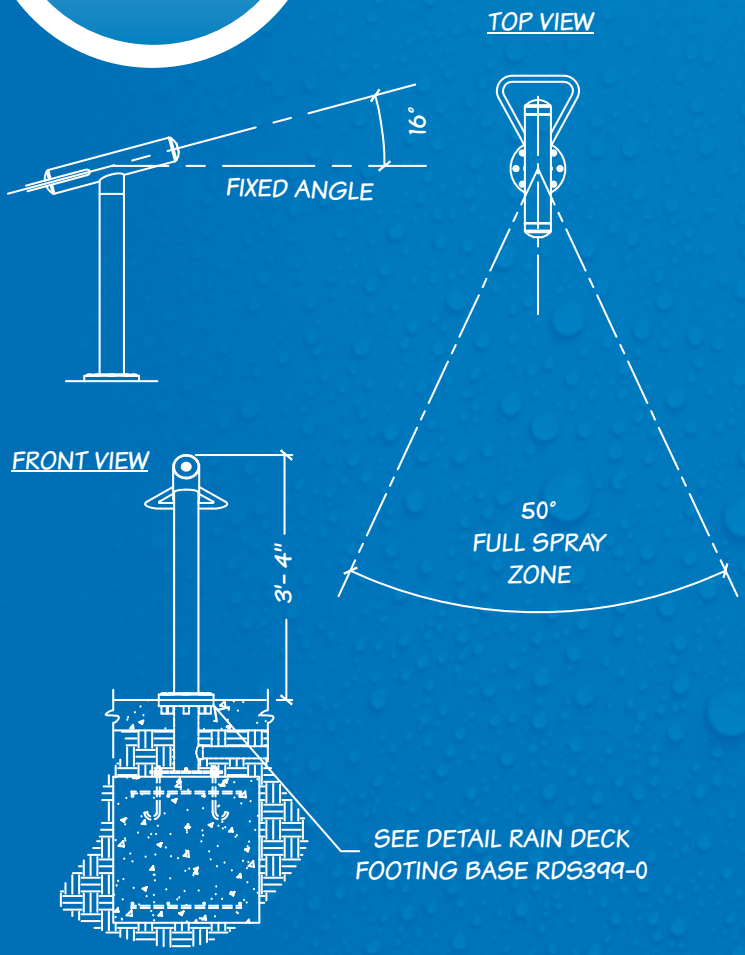

NAME	RDS347-0 SS Rain Blaster
MATERIAL	Stainless Steel
SURFACE FINISH	Powder Coat
FLOW RATE	5-15 GPM @ > 5 PSI
COMPATABLE WITH	RDS399-0

Water Cannon

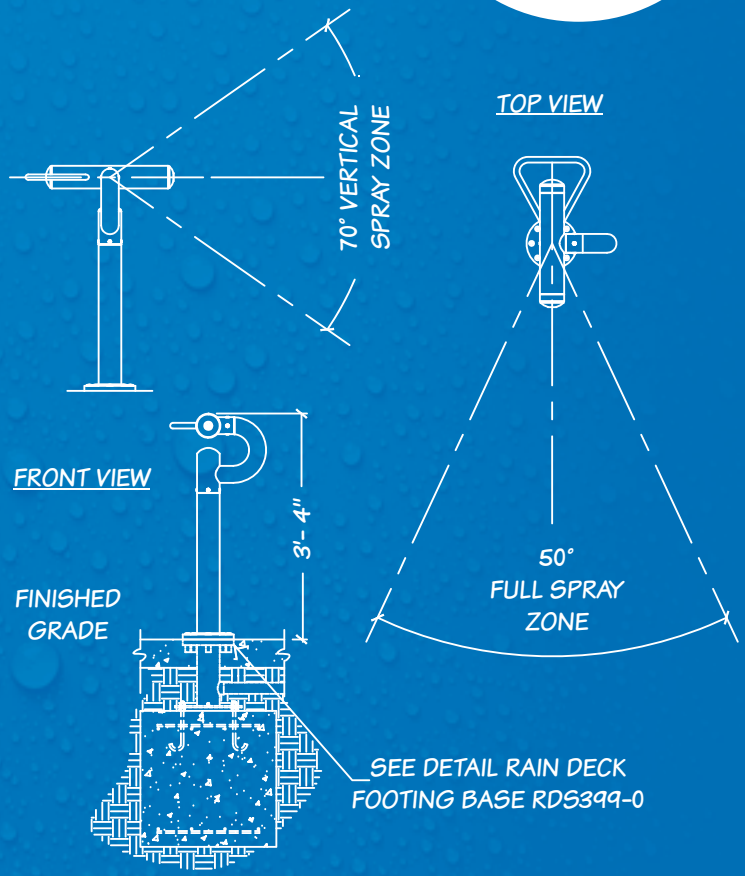

COMMERCIAL

NAME	RDS348-0 SS Water Cannon
MATERIAL	Stainless Steel
SURFACE FINISH	Powder Coat
FLOW RATE	5-15 GPM @ > 5 PSI
COMPATABLE WITH	RDS399-0

Rain Tower

RDS349-0

COMMERCIAL

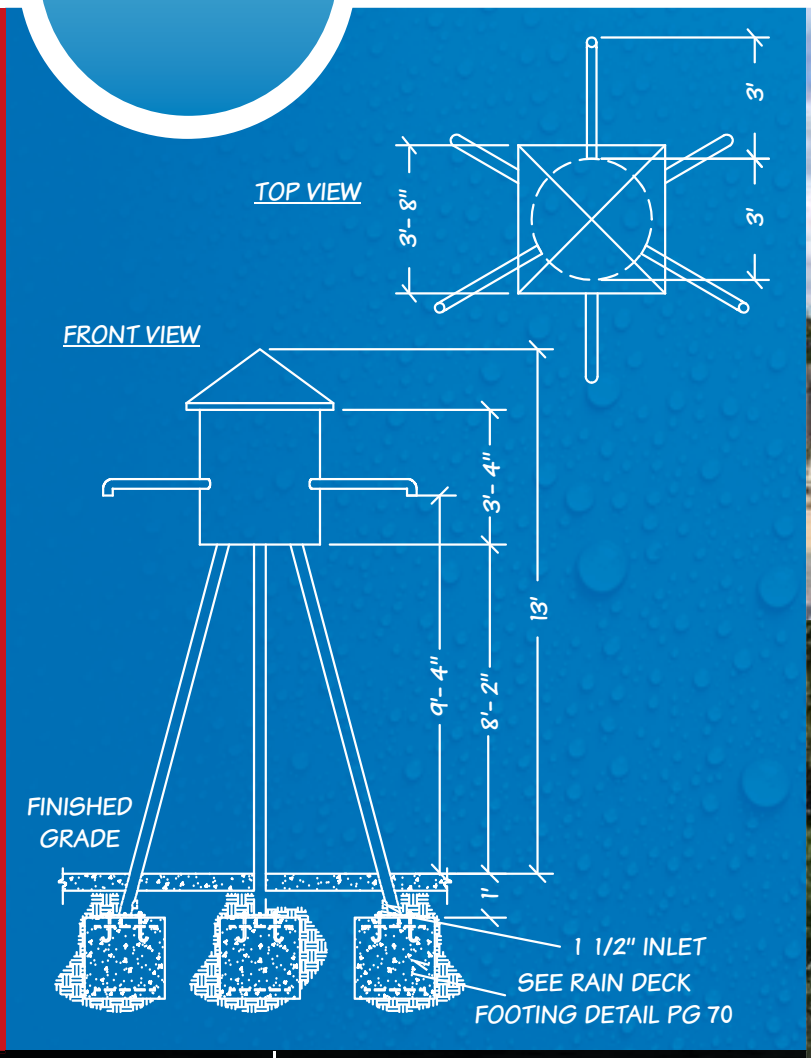

NAME	RDS349-0 SS Rain Tower
MATERIAL	Stainless Steel, Aluminum
SURFACE FINISH	Powder Coat
FLOW RATE	15-60 GPM @ > 5 PSI
COMPATABLE WITH	Underground Footing Only

RDS350-0

Big Tsunami

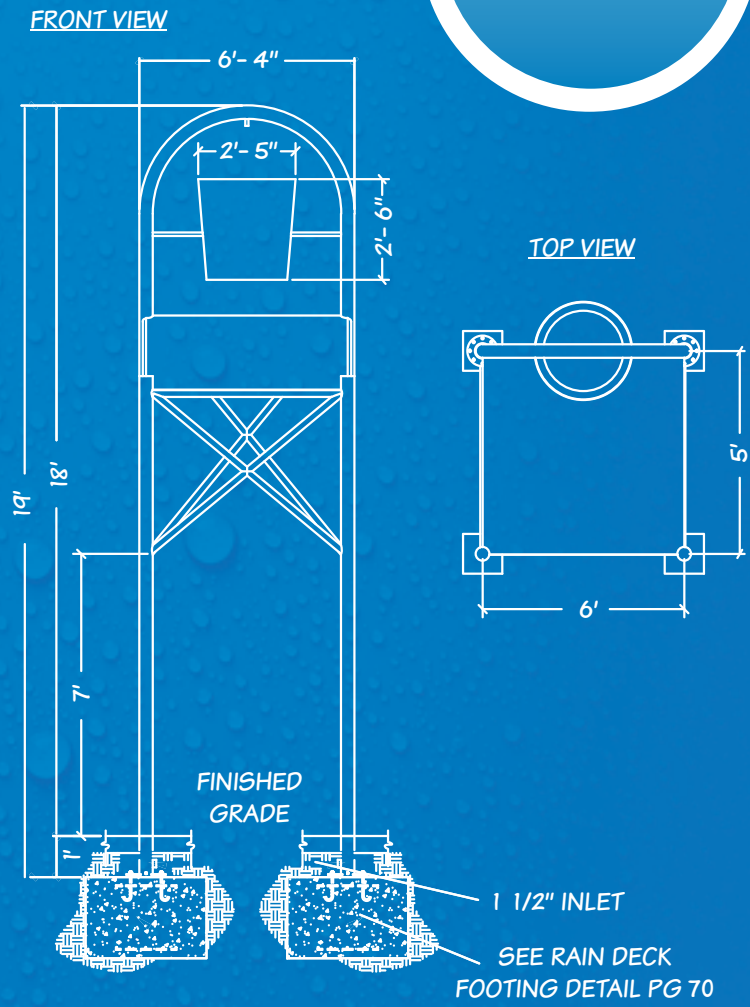

COMMERCIAL

NAME	RDS350-0 SS Big Tsunami
MATERIAL	Stainless Steel, Aluminum
SURFACE FINISH	Powder Coat
FLOW RATE	30-90 GPM @ > 5 PSI
COMPATABLE WITH	Underground Footing Only

Bucket Tower 1

RDS351-0

COMMERCIAL

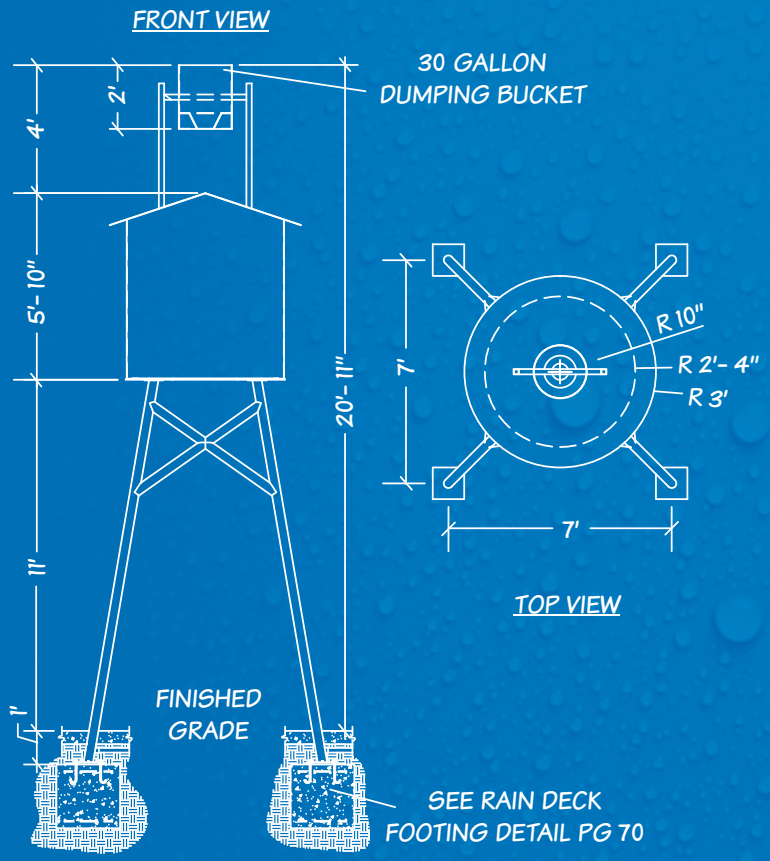

NAME	RDS351-0 SS Bucket Tower 1
MATERIAL	Stainless Steel, Aluminum
SURFACE FINISH	Powder Coat
FLOW RATE	30-90 GPM @ > 5 PSI
COMPATABLE WITH	Underground Footing Only

Bucket Tower 2

COMMERCIAL

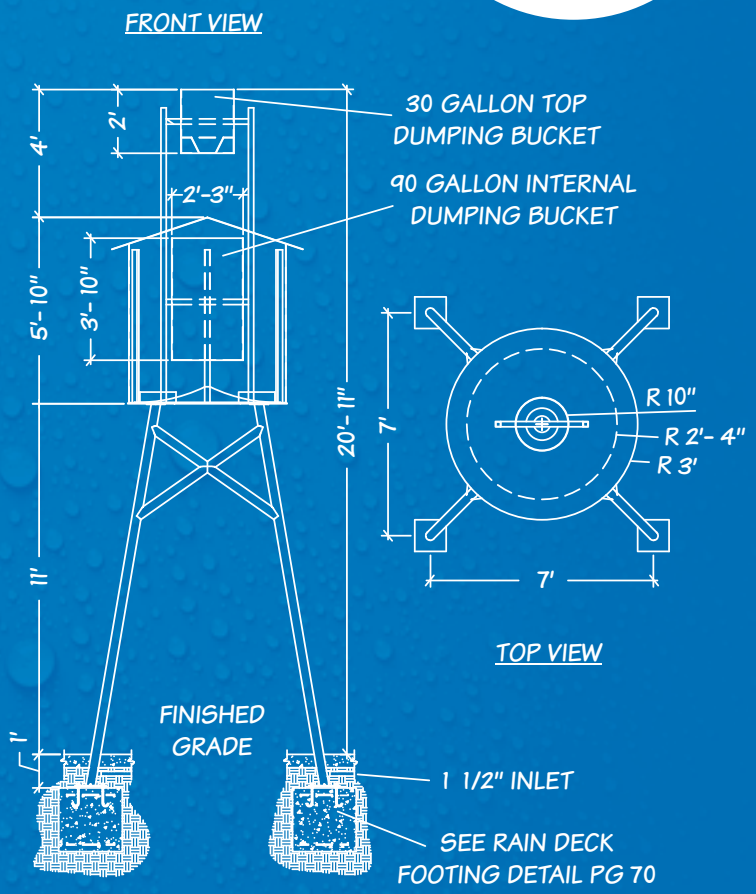

NAME	RDS352-0 SS Bucket Tower 2
MATERIAL	Stainless Steel, Aluminum
SURFACE FINISH	Powder Coat
FLOW RATE	60-180 GPM @ > 5 PSI
COMPATABLE WITH	Underground Footing Only

Water Loop 7’

RDS353-0

COMMERCIAL

TOP VIEW

FRONT VIEW

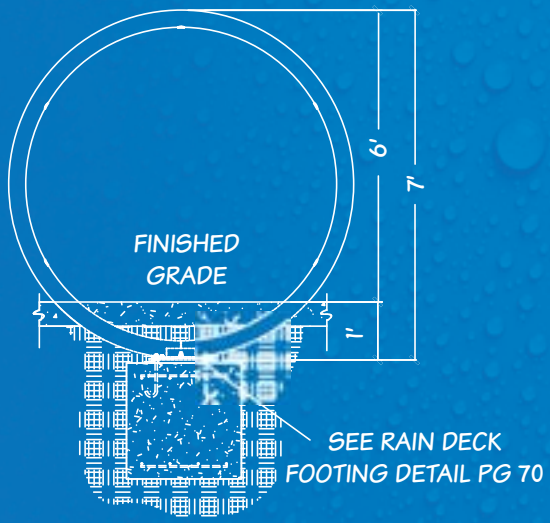

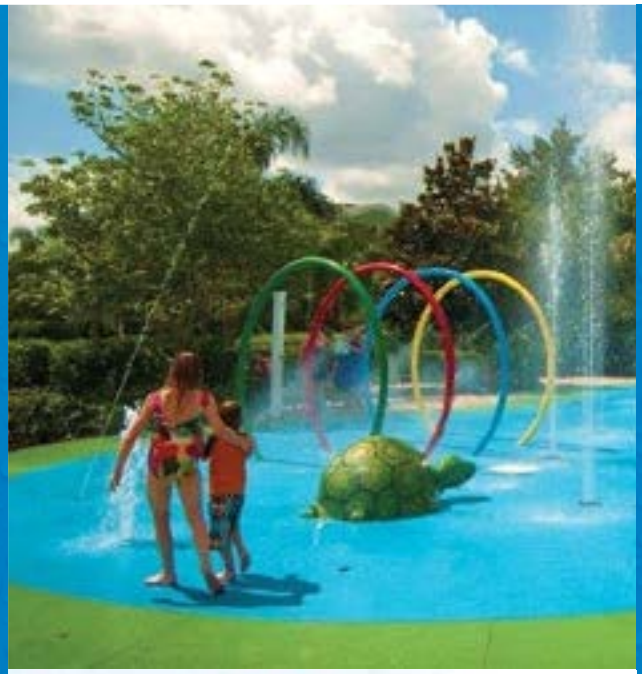

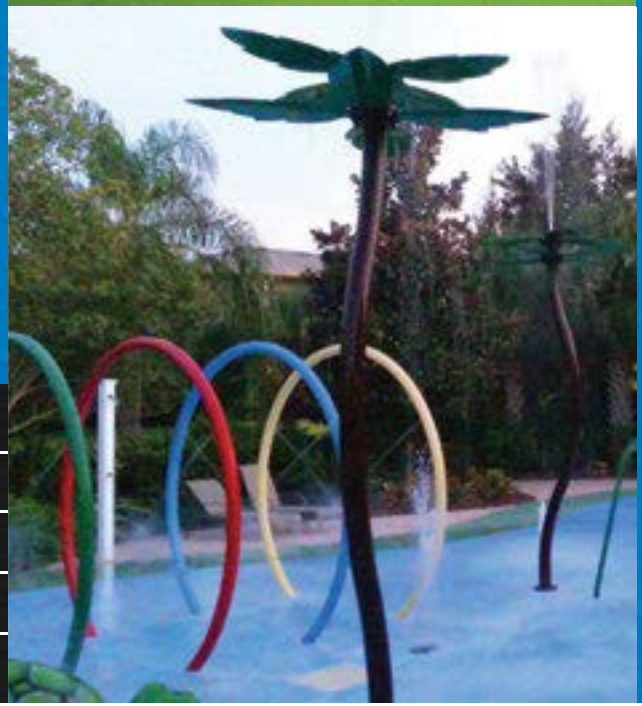

NAME	RDS353-0 SS Water Loop 7’
MATERIAL	Stainless Steel
SURFACE FINISH	Powder Coat
FLOW RATE	7-8 GPM @ > 10 PSI
COMPATABLE WITH	Underground Footing Only

Water Loop 7' Set

TOP VIEW

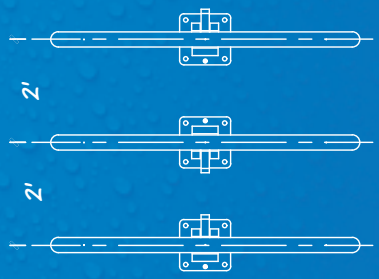

FRONT VIEW

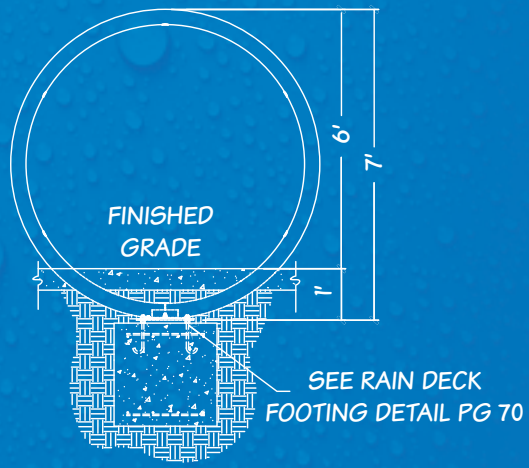

COMMERCIAL

NAME	RDS354-0 SS Water Loop 7' Set (3)
MATERIAL	Stainless Steel
SURFACE FINISH	Powder Coat
FLOW RATE	20-25 GPM @ > 10 PSI
COMPATABLE WITH	Underground Footing Only

SS Footing Base

RDS399-0

COMMERCIAL

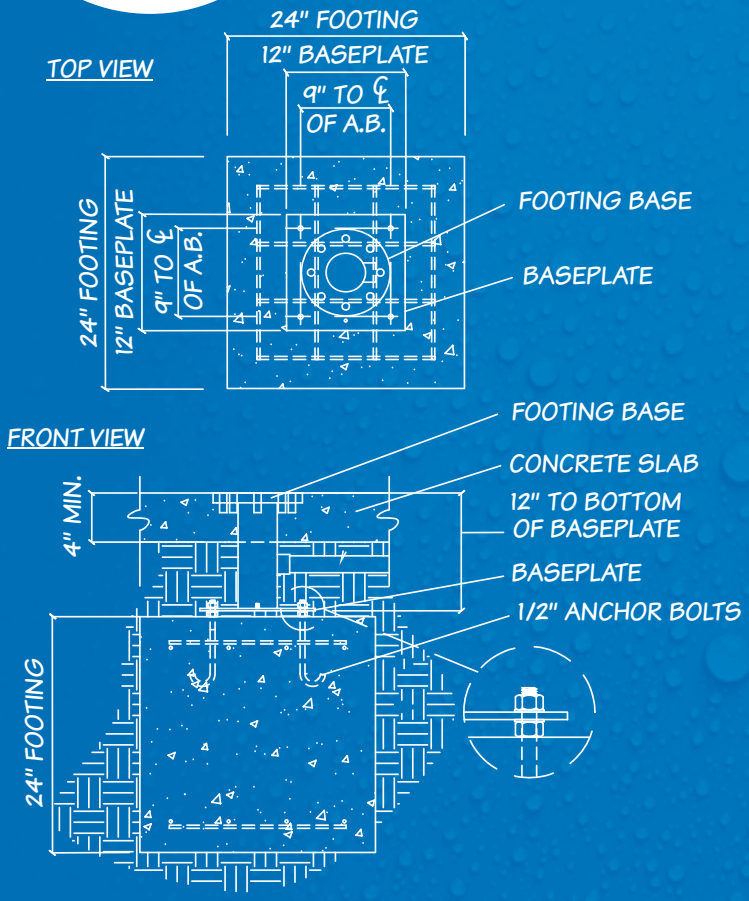

STAINLESS STEEL FOOTING BASE INSTALLATION

The Rain Deck Stainless Steel Footing Base is the foundation of nearly all our commercial above ground features. This universal footing base allows every customer the versatility to interchange their features at any time. This makes Rain Deck splash pads expandable and affordable.

Permanent Feature Footing Detail

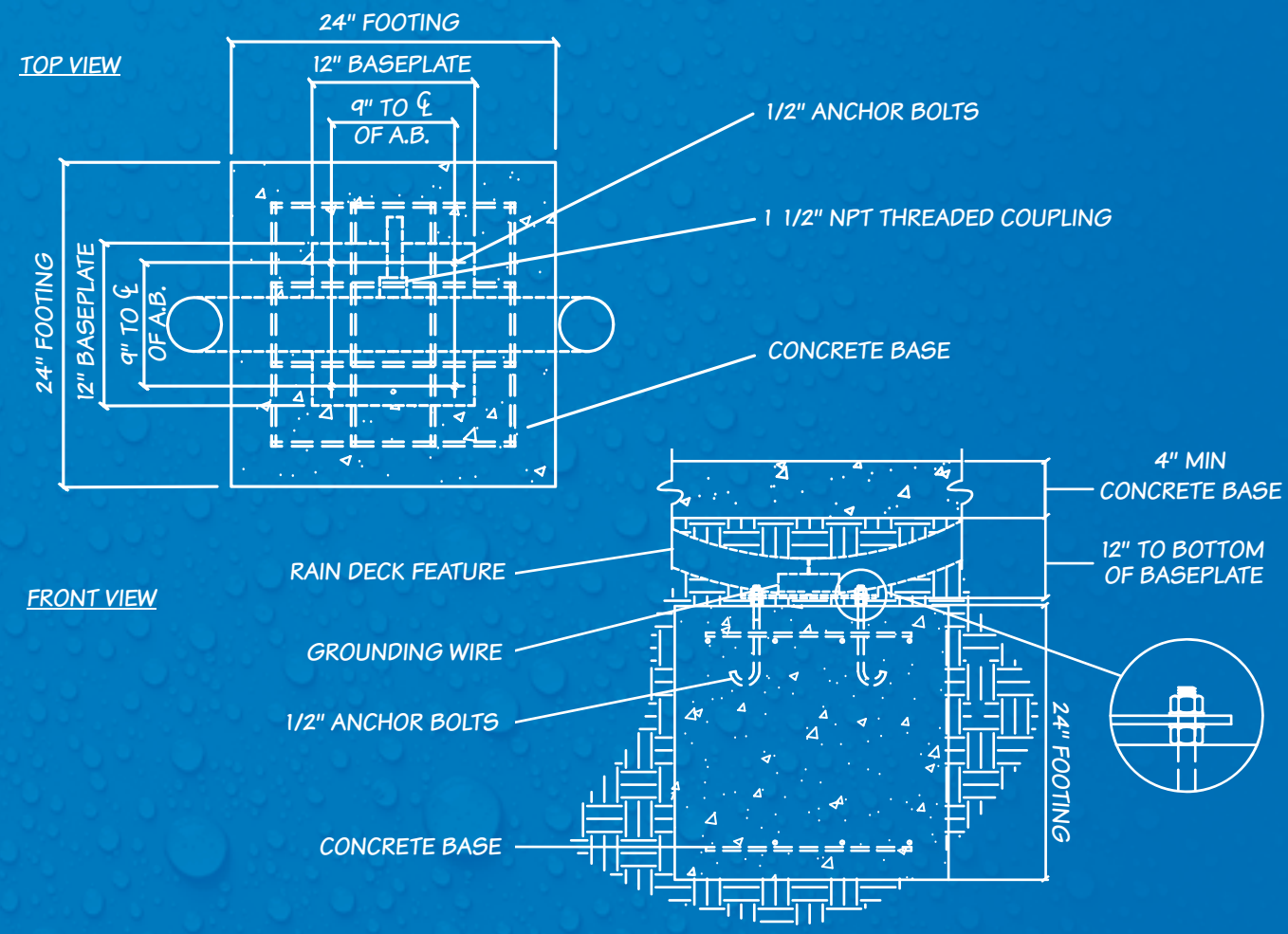

COMMERCIAL

For features that do not use the RDS399 Footing Base, such as arches, loops and towers, Rain Deck provides the hardware and instructions for installation. Contact your Rain Deck representative at 1-888-445-RAIN for more information and assistance.

LIGHT COMMERCIAL ABOVE GROUND FEATURES

Rain Deck Light Commercial features are very affordable. With Rain Deck's industry-leading inter-changeable products you can control the design of your splash pad by adding or changing any new feature with the popular Rain Deck Footing Base. Made of high strength PVC and finished with automotive-grade paint, Rain Deck Light Commercial features are an attractive addition to any light commercial splash pad.

COLOR CHART

Painted Finishes

Acrylic Flower Petals

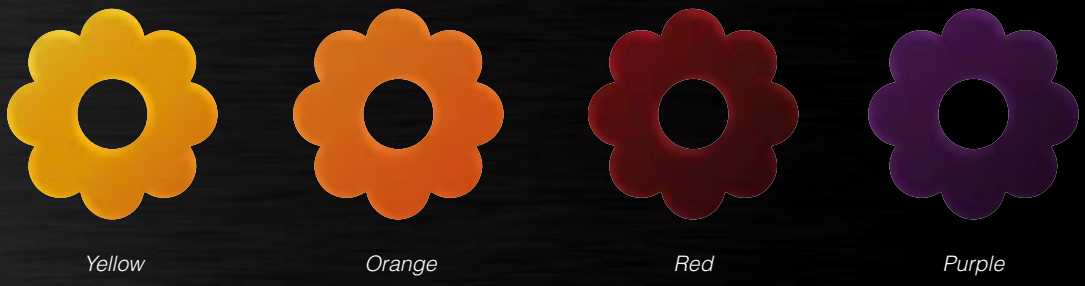

*Custom design patterns, metallics and air brushing are available at an additional charge.

*NOTE: Color samples cannot be considered a totally accurate representation of the actual paint color and should only be used as general guidance for selecting a feature color. All painted items may fade over time due to exposure to the elements.

Water Mushroom 40”

RD300-0

LIGHT COMMERCIAL

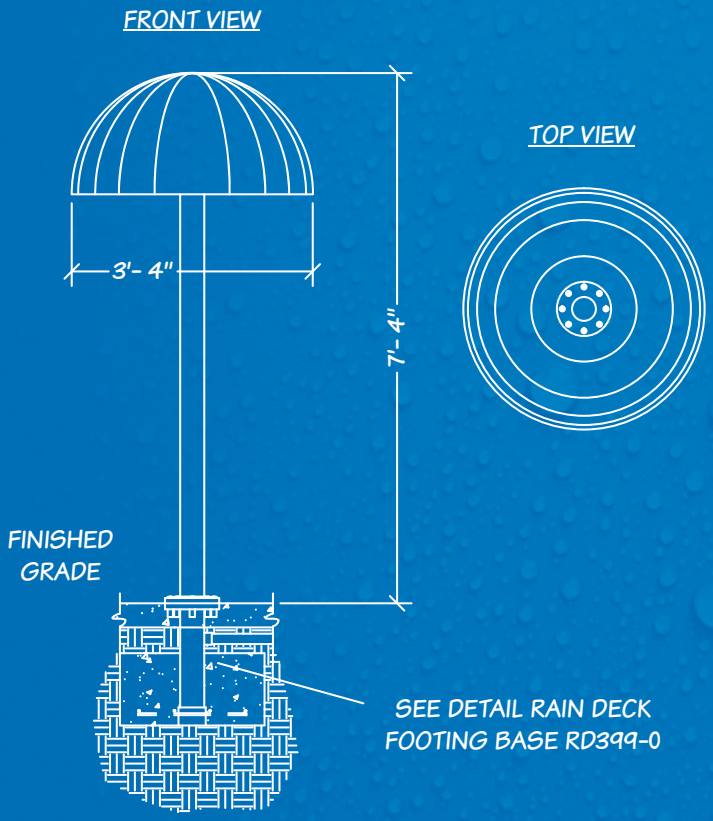

NAME	RD300-0 Water Mushroom 40”
MATERIAL	PVC, Fiberglass
SURFACE FINISH	UV Resistant Automotive Paint
FLOW RATE	10-90 GPM @ > 5 PSI
COMPATABLE WITH	RD399-0 and RDS399-0

Water Umbrella 47”

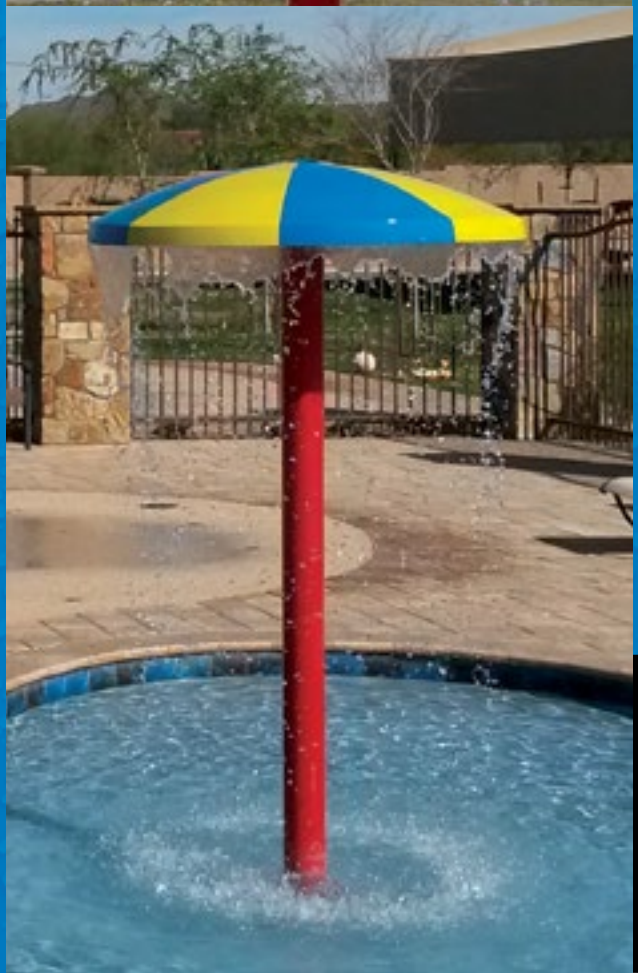

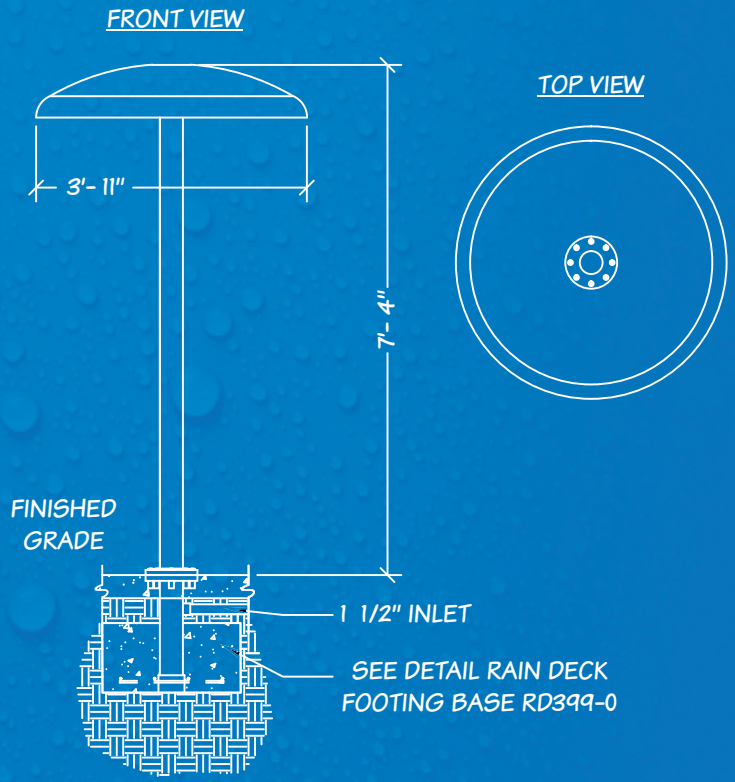

NAME	RD301-0 Water Umbrella 47”
MATERIAL	PVC, Fiberglass
SURFACE FINISH	UV Resistant Automotive Paint
FLOW RATE	10-90 GPM @ > 5 PSI
COMPATABLE WITH	RD399-0 and RDS399-0

Water Mushroom 30”

RD302-0

LIGHT COMMERCIAL

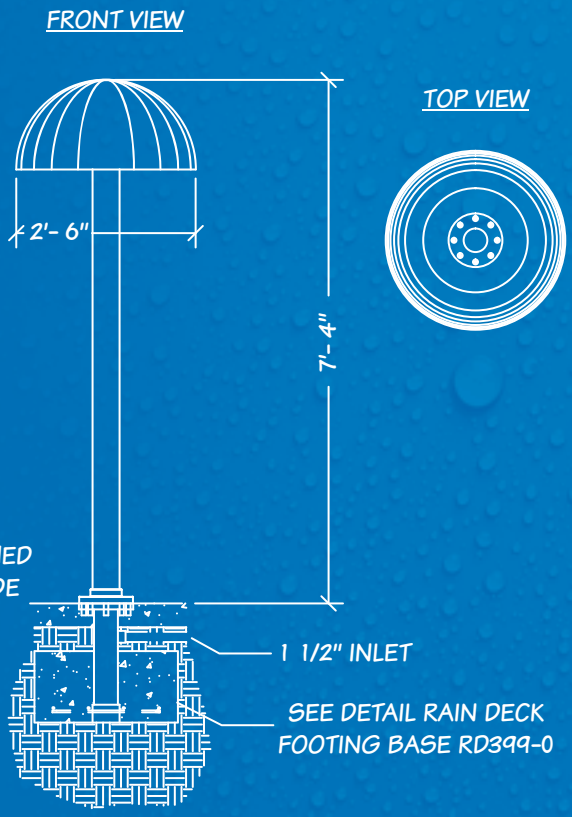

NAME	RD302-0 Water Mushroom 30”
MATERIAL	PVC, Fiberglass
SURFACE FINISH	UV Resistant Automotive Paint
FLOW RATE	10-90 GPM @ > 5 PSI
COMPATABLE WITH	RD399-0 and RDS399-0

Flower Shower 2

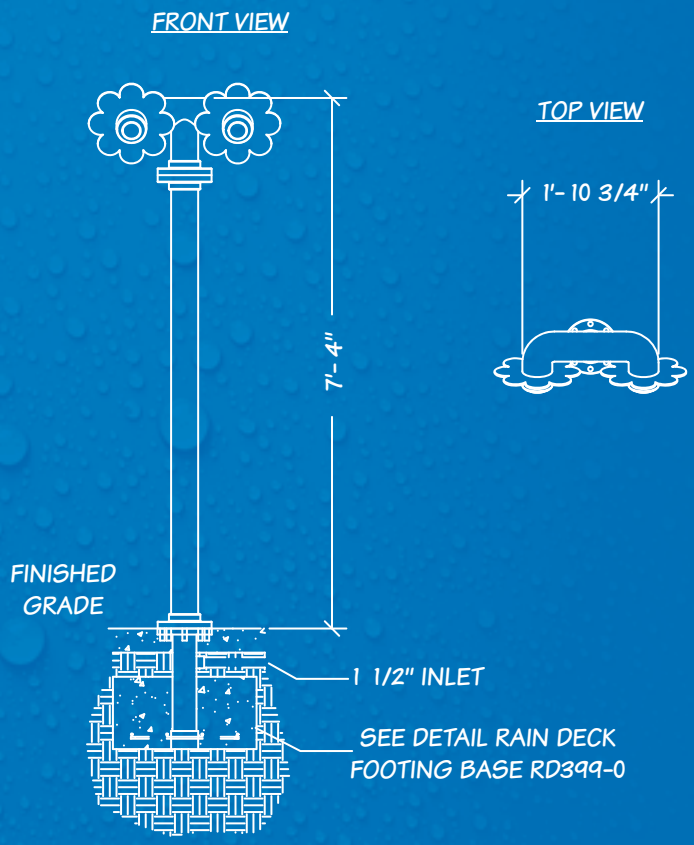

LIGHT COMMERCIAL

NAME	RD303-0 Flower Shower 2
MATERIAL	PVC, Acrylic
SURFACE FINISH	UV Resistant Automotive Paint
FLOW RATE	10-40 GPM @ > 5 PSI
COMPATABLE WITH	RD399-0 and RDS399-0

Flower Shower 4

RD304-0

LIGHT COMMERCIAL

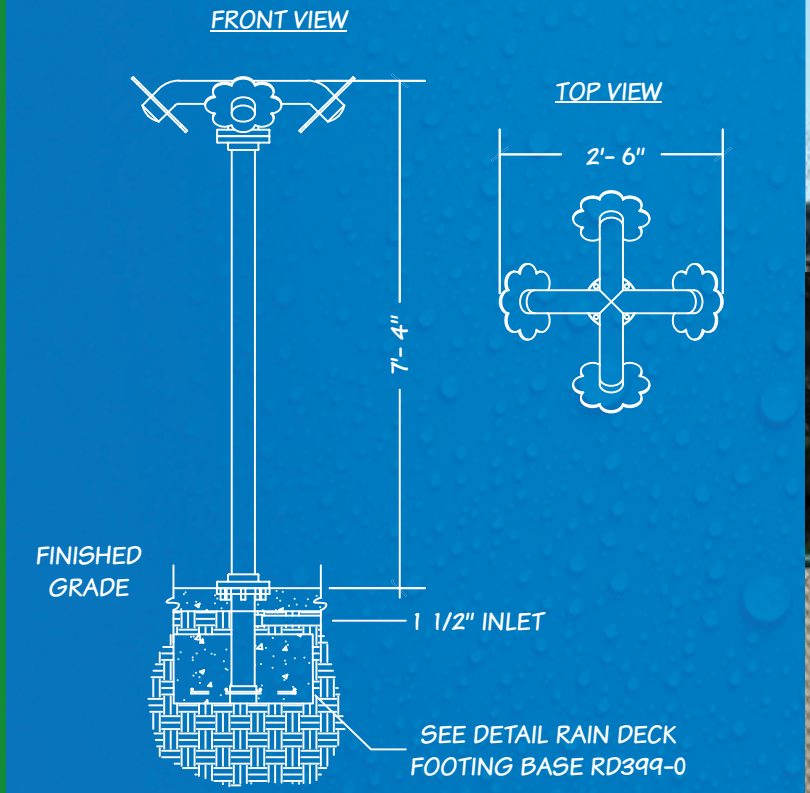

NAME	RD304-0 Flower Shower 4
MATERIAL	PVC, Acrylic
SURFACE FINISH	UV Resistant Automotive Paint
FLOW RATE	20-80 GPM @ > 5 PSI
COMPATABLE WITH	RD399-0 and RDS399-0

Flower Shower 3

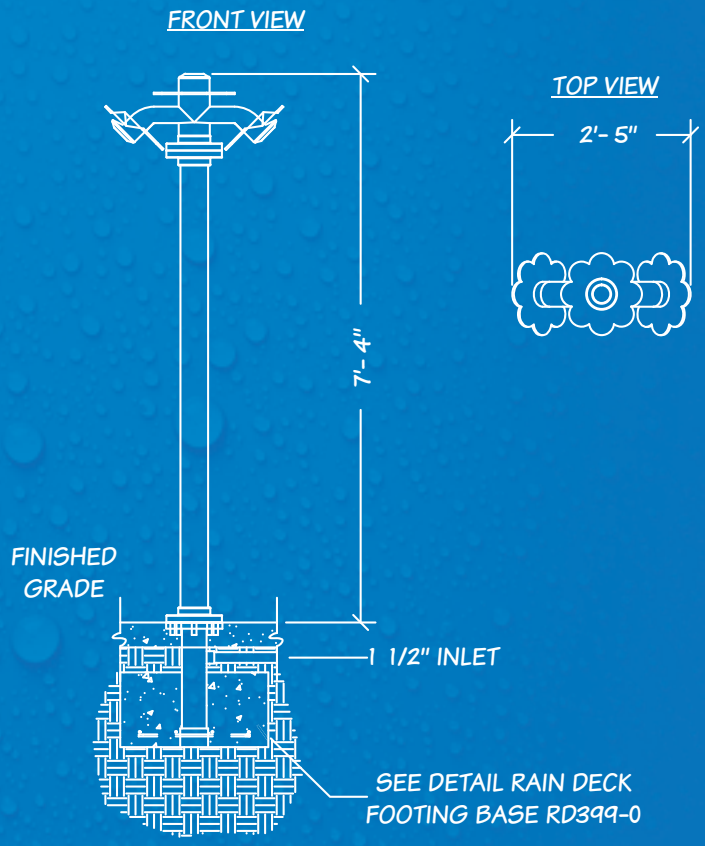

LIGHT COMMERCIAL

NAME	RD306-0 Flower Shower 3
MATERIAL	PVC, Acrylic
SURFACE FINISH	UV Resistant Automotive Paint
FLOW RATE	15-60 GPM @ > 5 PSI
COMPATABLE WITH	RD399-0 and RDS399-0

Fire Hydrant

RD307-0

LIGHT COMMERCIAL

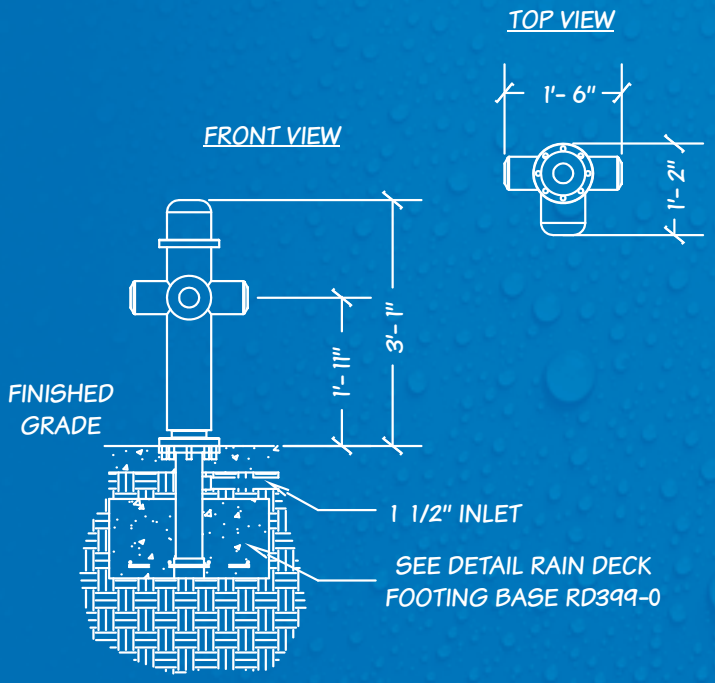

NAME	RD307-0 Fire Hydrant Soaker
MATERIAL	PVC
SURFACE FINISH	UV Resistant Automotive Paint
FLOW RATE	20-40 GPM @ > 5 PSI
COMPATABLE WITH	RD399-0 and RDS399-0

Rain Stick

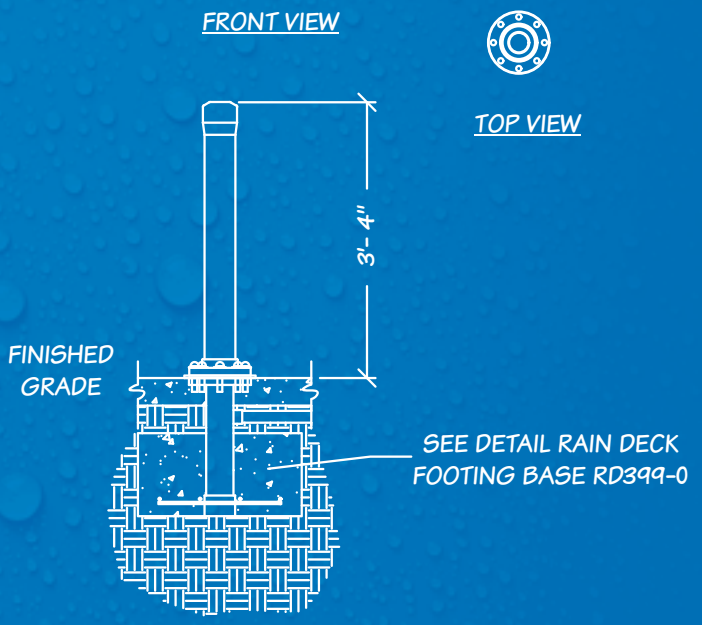

NAME	RD308-0 Rain Stick
MATERIAL	PVC
SURFACE FINISH	UV Resistant Automotive Paint
FLOW RATE	5-20 GPM @ > 5 PSI
COMPATABLE WITH	RD399-0 and RDS399-0

Rainy Palm Tree

RD309-0

LIGHT COMMERCIAL

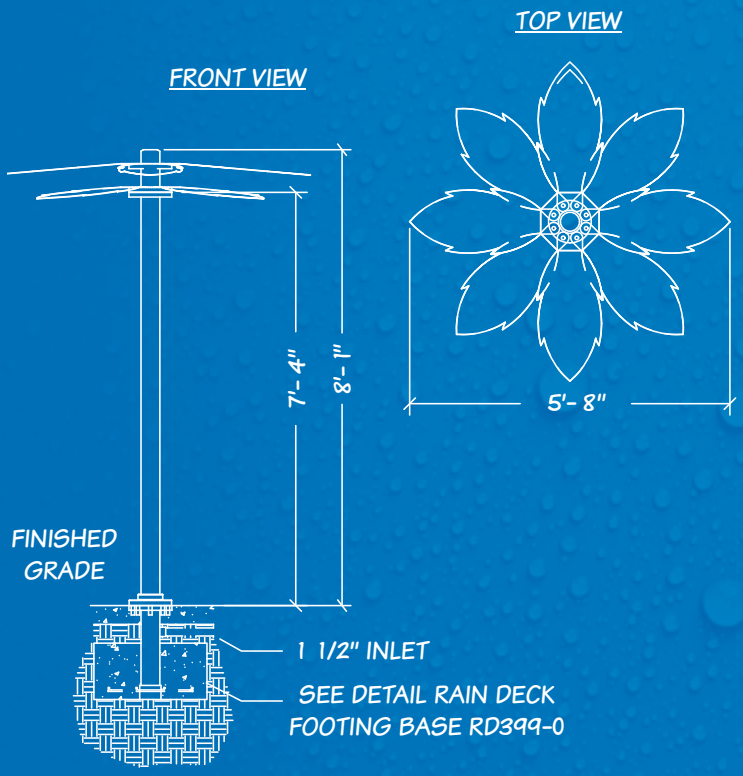

NAME	RD309-0 Rainy Palm Tree
MATERIAL	PVC, Aluminum
SURFACE FINISH	UV Resistant Automotive Paint
FLOW RATE	5-20 GPM @ > 5 PSI
COMPATABLE WITH	RD399-0 and RDS399-0

Shower Sprayer

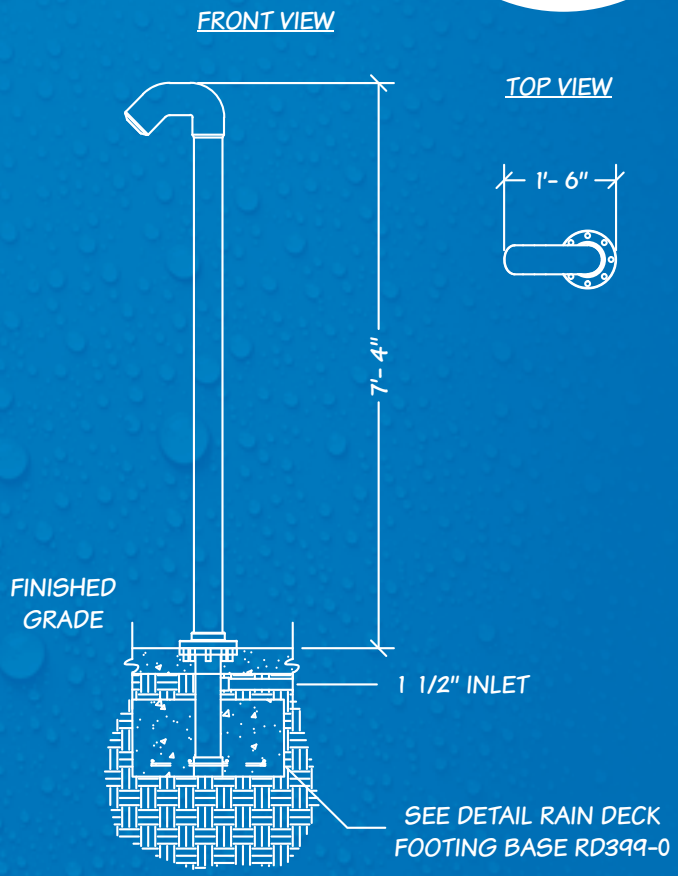

LIGHT COMMERCIAL

NAME	RD310-0 Shower Sprayer
MATERIAL	PVC
SURFACE FINISH	UV Resistant Automotive Paint
FLOW RATE	5-20 GPM @ > 5 PSI
COMPATABLE WITH	RD399-0 and RDS399-0

Cactus Cooler

RD311-0

LIGHT COMMERCIAL

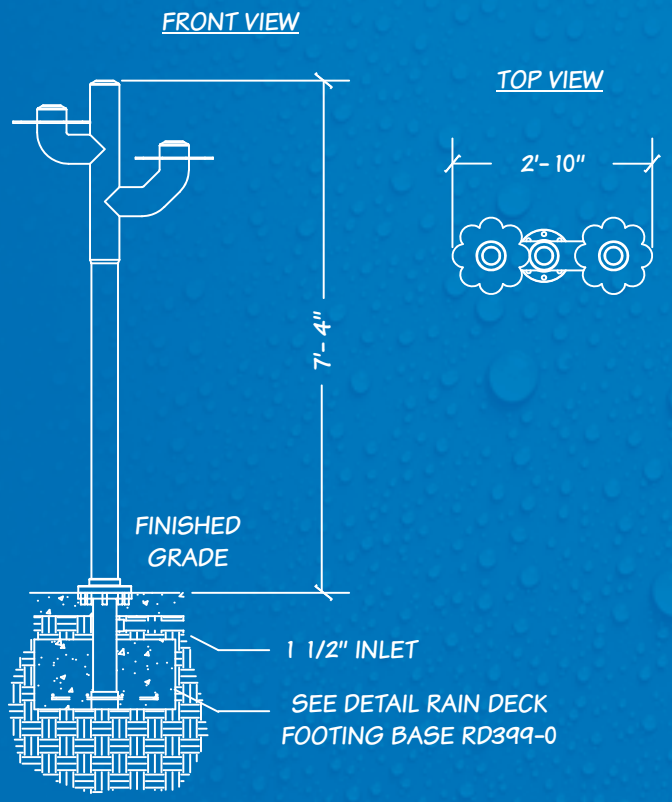

NAME	RD311-0 Cactus Cooler
MATERIAL	PVC, Acrylic
SURFACE FINISH	UV Resistant Automotive Paint
FLOW RATE	15 GPM @ > 5 PSI
COMPATABLE WITH	RD399-0 and RDS399-0

Flower Shower 1

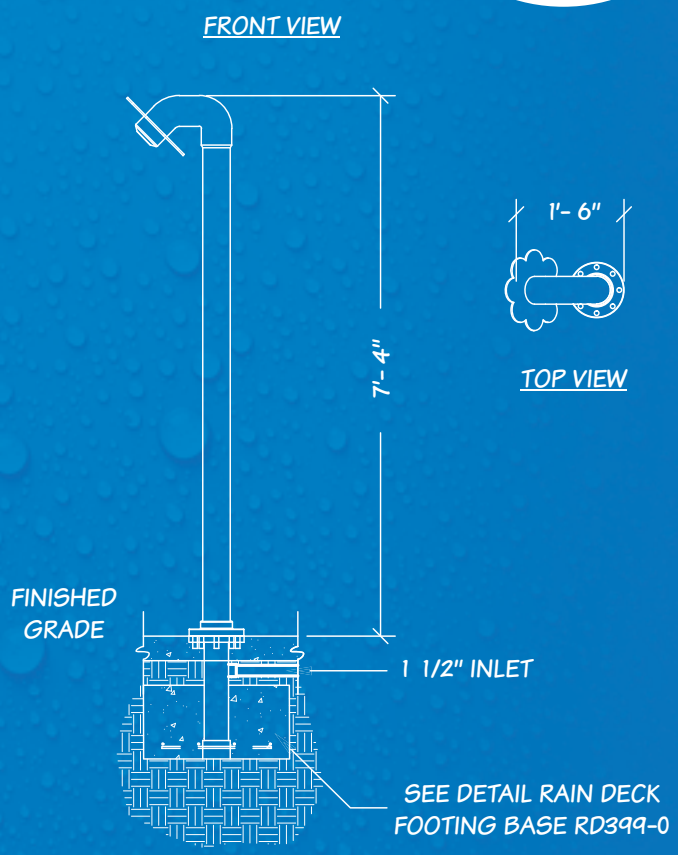

NAME	RD312-0 Flower Shower 1
MATERIAL	PVC, Acrylic
SURFACE FINISH	UV Resistant Automotive Paint
FLOW RATE	5-20 GPM @ > 5 PSI
COMPATABLE WITH	RD399-0 and RDS399-0

Dumping Bucket 2

RD313-0

LIGHT COMMERCIAL

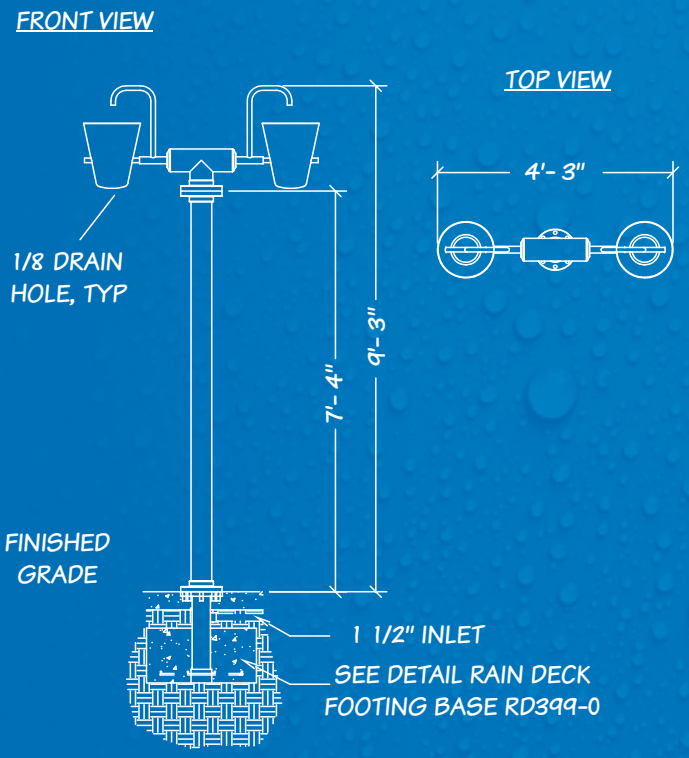

NAME	RD313-0 Dumping Bucket 2
MATERIAL	PVC, Fiberglass
SURFACE FINISH	UV Resistant Automotive Paint
FLOW RATE	10-30 GPM @ > 5 PSI
COMPATABLE WITH	RD399-0 and RDS399-0

Mini Mushroom

FRONT VIEW

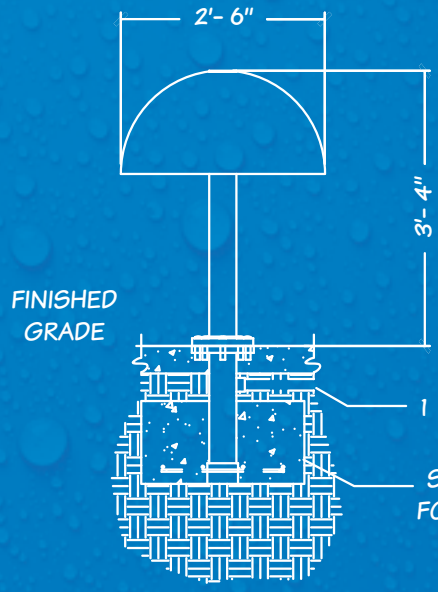

TOP VIEW

LIGHT COMMERCIAL

NAME	RD314-0 Mini Mushroom
MATERIAL	PVC, Fiberglass
SURFACE FINISH	UV Resistant Automotive Paint
FLOW RATE	5-20 GPM @ > 3 PSI
COMPATABLE WITH	RD399-0 and RDS399-0

Light House

RD315-0

LIGHT COMMERCIAL

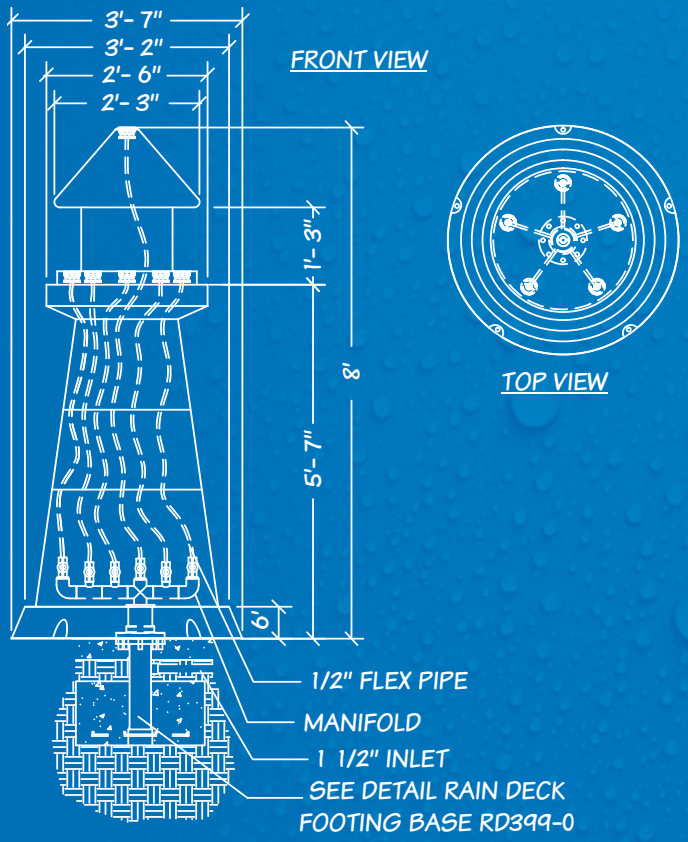

TOP VIEW

NAME	RD315-0 Lighthouse
MATERIAL	Fiberglass
SURFACE FINISH	UV Resistant Automotive Paint
FLOW RATE	12-80 GPM @ > 5 PSI
COMPATABLE WITH	RD399-0 and RDS399-0

Water Fall

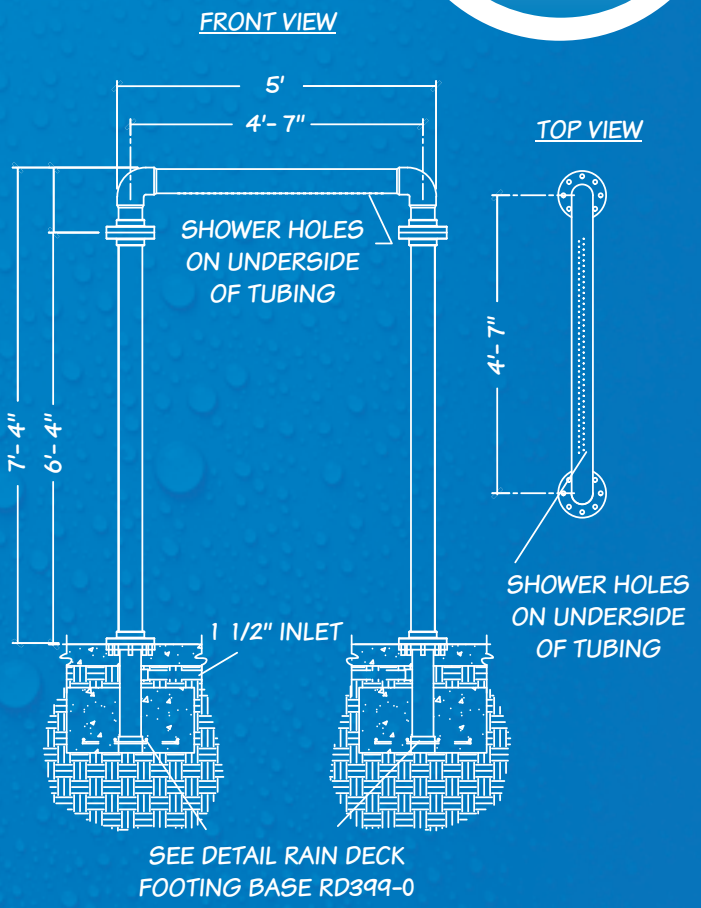

NAME	RD316-0 Waterfall
MATERIAL	PVC
SURFACE FINISH	UV Resistant Automotive Paint
FLOW RATE	10-90 GPM @ > 5 PSI
COMPATABLE WITH	RD399-0 and RDS399-0

Spray Plate Post

RD317-0

LIGHT COMMERCIAL

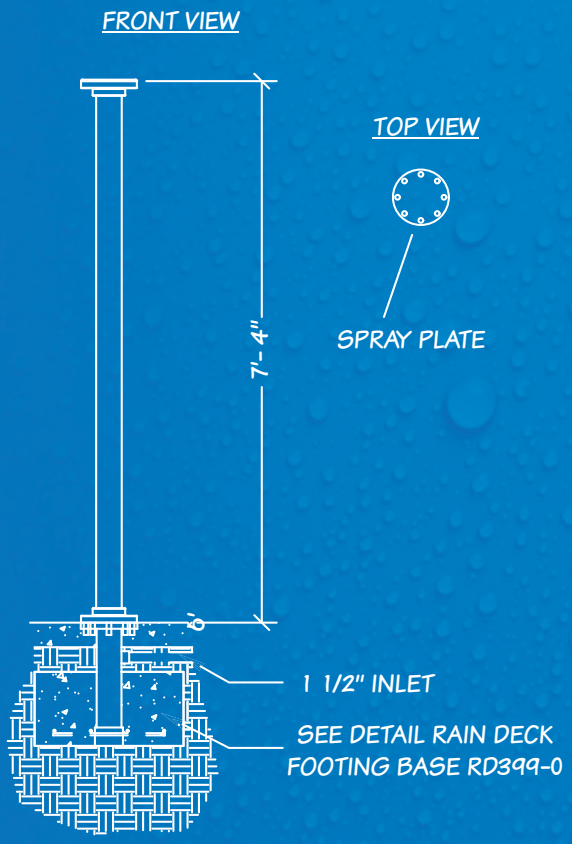

NAME	RD317-0 Spray Plate Post
MATERIAL	PVC
SURFACE FINISH	UV Resistant Automotive Paint
FLOW RATE	5-20 GPM @ > 5 PSI
COMPATABLE WITH	RD399-0 and RDS399-0

Footing Base

TOP VIEW

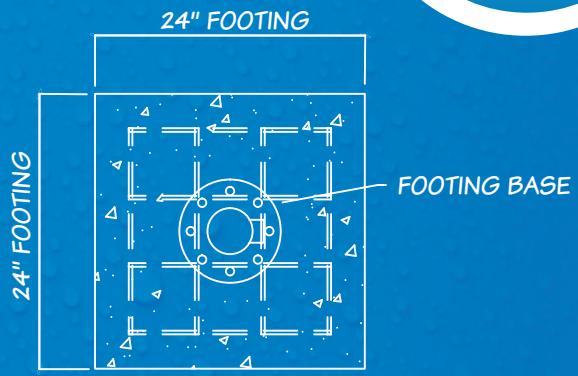

FRONT VIEW

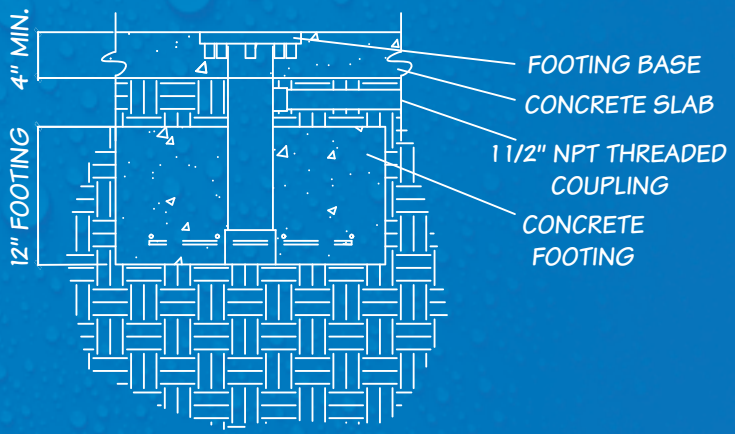

The Rain Deck Footing Base is the foundation for all of our light commercial above ground features. This universal footing base allows every customer the versatility to interchange their features at any time. This makes Rain Deck splash pads expandable and affordable.

Custom Features

Need a custom water feature or unique paint scheme? This is where Rain Deck truly excels. Our professional design team can create any project from a simple concept to a custom themed water attraction. With our in-house, state of the art CNC machines and fabrication equipment, there is no limit to what we can do. From large dumping bucket towers, to themed splash pad features, we can customize any project to your unique specifications. Send us a sketch… we'll get you a quote. It's that simple.

RAINDECK

GROUND SPRAY ELEMENTS

Nozzles

The Rain Deck Universal Housing is just that… universal. With the Rain Deck Nozzle Tool, customers can swap out one nozzle for another at any time. Rain Deck currently offers many different types of spray nozzles, including winterization caps and custom nozzle patterns.

So, whether you want to mix things up a bit for the kids, or need to winterize your splash pad at the end of the season, Rain Deck has specially designed their ground sprays to make it hassle free. Rain Deck offers ground spray jets in Delrin, PVC, aluminum, stainless steel, and brass. Ask a Rain Deck representative about the benefits of each type of material.

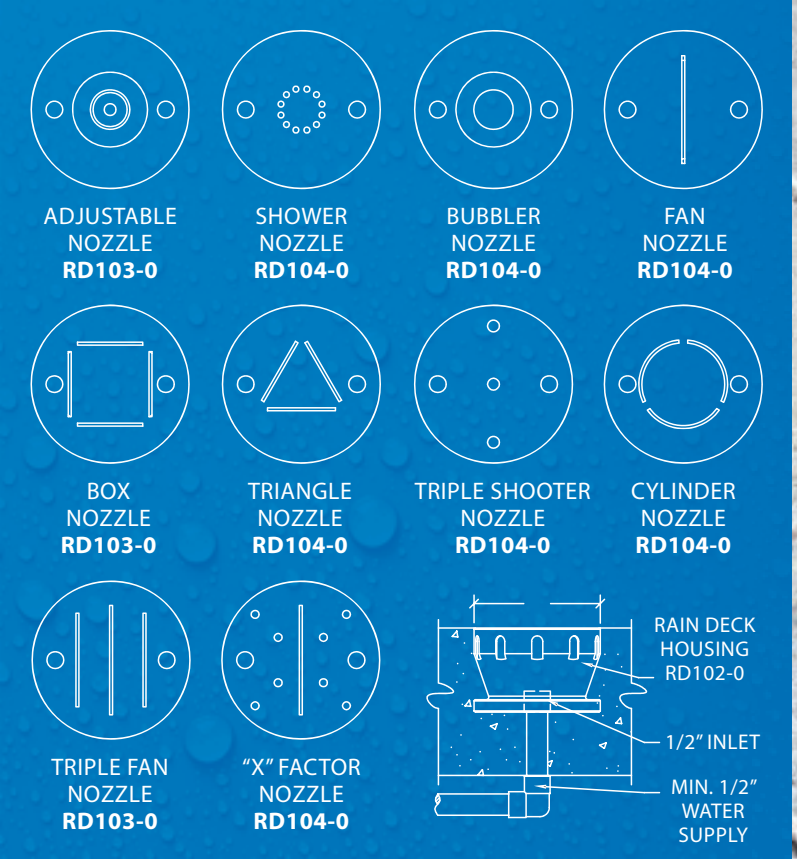

MFG #	NAME	FLOW RATE
RD100-0	RD NOZZLE TOOL	N/A
RD102-0	RD 3" UNIVERSAL HOUSING	N/A
RD103-0	RD 3" ADJUSTABLE NOZZLE	2 GPM @ 5 PSI (8' spray height)
RD104-0	RD 3" SHOWER NOZZLE	5 GPM @ 3 PSI (4' spray height)
RD105-0	RD 3" BUBBLER NOZZLE	10.5 GPM @ 5 PSI (18" spray height)
RD106-0	RD 3" FAN NOZZLE	3.5 GPM @ 5 PSI (3' spray height)
RD107-0	RD 3" BOX NOZZLE	10 GPM @ 5 PSI (5' spray height)
RD108-0	RD 3" TRIANGLE NOZZLE	6.5 GPM @ 5 PSI (5' spray height)
RD109-0	RD 3" BLANK WINTERIZATION NOZZLE	N/A
RD110-0	RD 3" TRIPLE SHOOTER NOZZLE	5 GPM @ 5 PSI (5' spray height)
RD111-0	RD 3" CYLINDER NOZZLE	7.5 GPM @ 5 PSI (5' spray height)
RD112-0	RD 3" TRIPLE FAN NOZZLE	10 GPM @ 5 PSI (5' spray height)
RD113-0	RD 3" "X" FACTOR NOZZLE	10 GPM @ 3 PSI (5' spray height)

GROUND SPRAY ELEMENTS

Formed Ground Sprays

Rain Deck Formed Ground Sprays are a great addition to any Splash Pad, creating fun and attractive patterns of water for you to enjoy. As with all of our ground sprays, the nozzles are interchangeable to control flow and desired spray pattern. You can also custom order any number of nozzles in our ground spray systems.

MFG #	NAME	FLOW RATE
RD129-0	RAIN DECK 8-NOZZLE RING OF WATER	16-40 GPM @ 5 PSI
RD130-0	RAIN DECK 12-NOZZLE RING OF WATER	24-60 GPM @ 5 PSI
RD131-0	RAIN DECK 8-NOZZLE LINE JET	16-40 GPM @ 5 PSI
RD132-0	RAIN DECK 10-NOZZLE RAIN TUNNEL	20-50GPM @ 5 PSI
RD133-0	RAIN DECK 8-NOZZLE SIDEWINDER	16-40 GPM @ 5 PSI

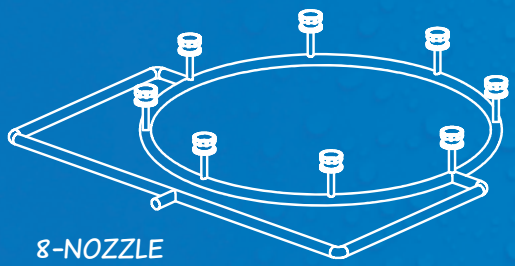

8-NOZZLE
RING OF WATER
RD129-0

12-NOZZLE
RING OF WATER
RD130-0

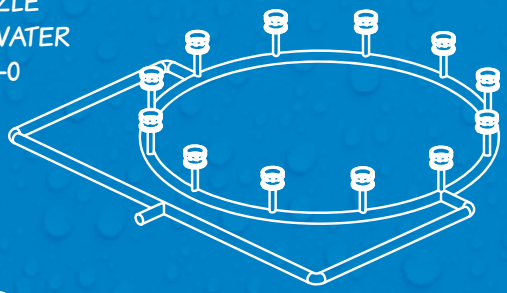

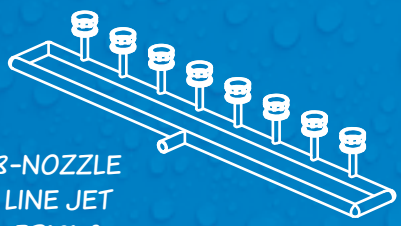

8-NOZZLE
LINE JET
RD131-0

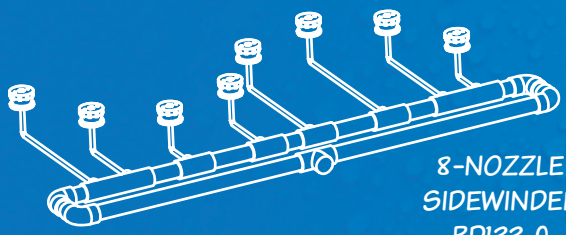

8-NOZZLE
SIDEWINDER
RD133-0

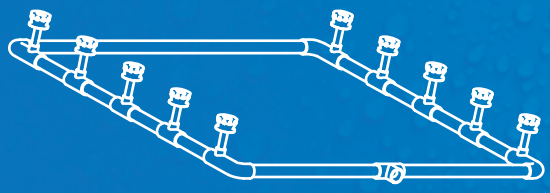

10-NOZZLE
RAIN TUNNEL
RD132-0

TYPICAL
INSTALLATION

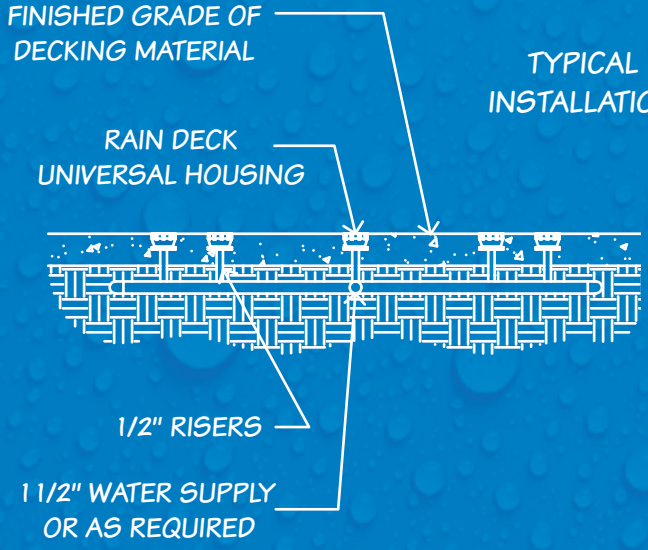

GROUND SPRAY ELEMENTS

Spray Plates

Rain Deck Spray Plates all attach to our RD399-0 and RDS399-0 footing bases, allowing you great variety and interchangeability of beautiful and fun spray options for your splash pad.

MFG#	NAME	FLOW RATE
RD399-1	RD FOOTING BASE SPRAY PLATE - LOW FLOW	8.75 GPM @ 5 PSI
RD399-2	RD FOOTING BASE SPRAY PLATE - HIGH FLOW	15.75 GPM @ 5 PSI
RD399-3	RD FOOTING BASE SPRAY PLATE - RAIN SPIDER	8.75 GPM @ 5 PSI
RD399-4	RD FOOTING BASE SPRAY PLATE - RAIN CROWN	8.75 GPM @ 5 PSI
RD399-5	RD FOOTING BASE SPRAY PLATE - RAIN WAVE	15.75 GPM @ 5 PSI
RD399-6	RD FOOTING BASE SPRAY PLATE - PALMERA	15.75 GPM @ 5 PSI

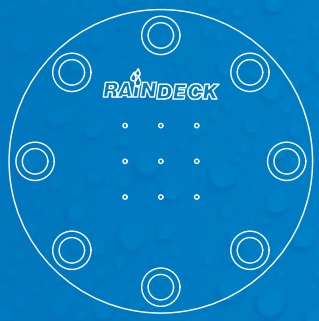

HIGH FLOW
RD399-2

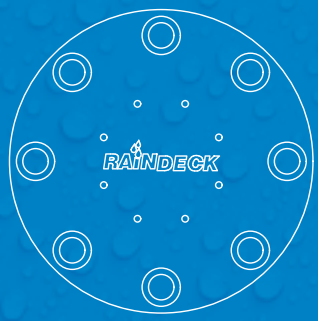

RAIN SPIDER
RD399-3

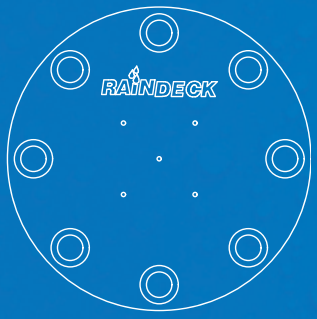

LOW FLOW
RD399-1

TYPICAL
INSTALLATIONS

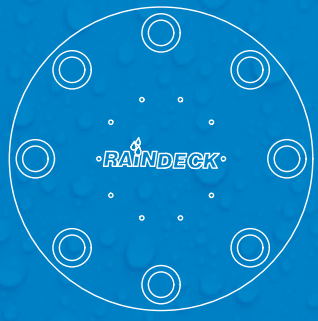

RAIN CROWN
RD399-4

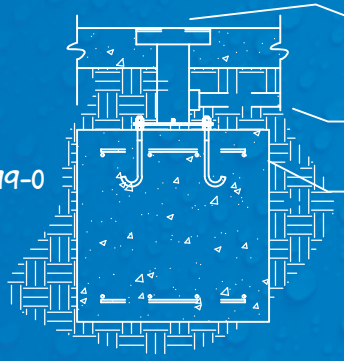

RDS399-0

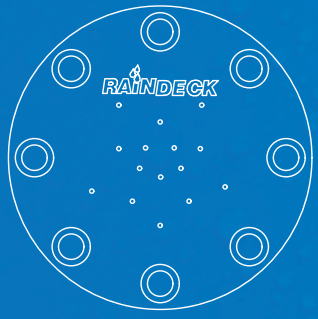

PALMERA
RD399-6

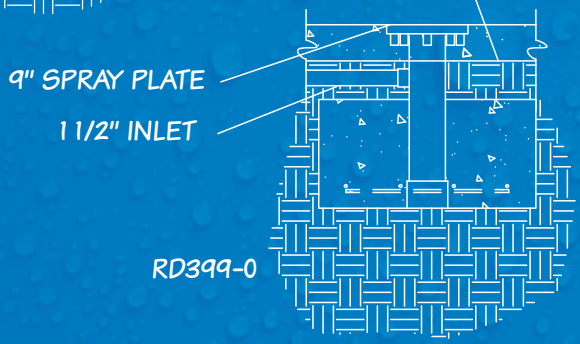

RD399-0

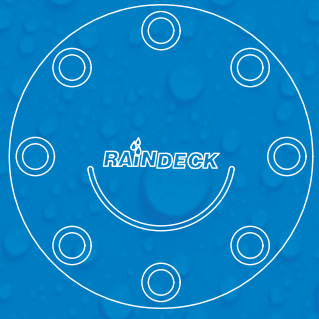

RAIN WAVE
RD399-5

LED Lighting

Rain Deck splash pads have always been a popular way to keep the kids cool and entertained during the day… but what about nighttime use? Rain Deck LED lights bring rich, vibrant colors to the water play area and create beautiful light shows for children and adults alike. Our energy conscious splash pad customers will love this new product, as Rain Deck LED lights have long lifetimes and high energy efficiency. According to the U.S. Department of Energy, no other lighting technology offers as much potential to save energy and enhance the quality of our building environments as LED lighting. Brighten up your splash pad with some LED lights!

RD520-0	4 MULTI-COLORED LED LIGHT KIT W/ CONTROLLER AND 45 WATT TRANSFORMER
RD521-0	6 MULTI-COLORED LED LIGHT KIT W/ CONTROLLER AND 120 WATT TRANSFORMER
RD522-0	8 MULTI-COLORED LED LIGHT KIT W/ CONTROLLER AND 120 WATT TRANSFORMER
RD523-0	10 MULTI-COLORED LED LIGHT KIT W/ CONTROLLER AND 120 WATT TRANSFORMER
RD525-0	MULTI-COLORED LED LIGHT
RD526-0	MULTI-COLORED LED LIGHT CONTROLLER

Splash Pad Kits

As the innovator of the residential splash pad, Rain Deck has created and patented a residential splash pad kit that provides the essential components that can give anyone an incredible splash pad installation. With sales and installations dotting the country, Rain Deck is the expert in providing a comprehensive group of components specifically manufactured for splash pads. We have trained hundreds of professional installers, professional landscapers, and do-it-yourselfers on the ease of installing a Rain Deck Splash Pad Kit.™ Buy your splash pad products with confidence from the industry's leading innovator and creator of the only patented splash pad kit.

Rain Deck founded the residential splash pad market on the premise of providing the consumer an affordable, safe and reliable water play feature for their residence. We quickly found out that this revolutionary splash pad product was not just for the residential customer - we have had a tremendous demand for Rain Deck Splash Pad Kits™ from RV Parks, Campgrounds, Day Cares and other light-commercial applications. Our splash pad kits were even featured on episodes of DIY's "Yard Crashers" and "The Vanilla Ice Project."

Rain Deck Splash Pad Kits™ offer a great base to start the design of any splash pad. Along with the purchase of a Rain Deck Splash Pad Kit, customers often include one or more of the Rain Deck above-ground water features.

RAINDECK

As Seen On

diy YARD CRASHERS

As Seen On

diy The Vanilla ICE PROJECT

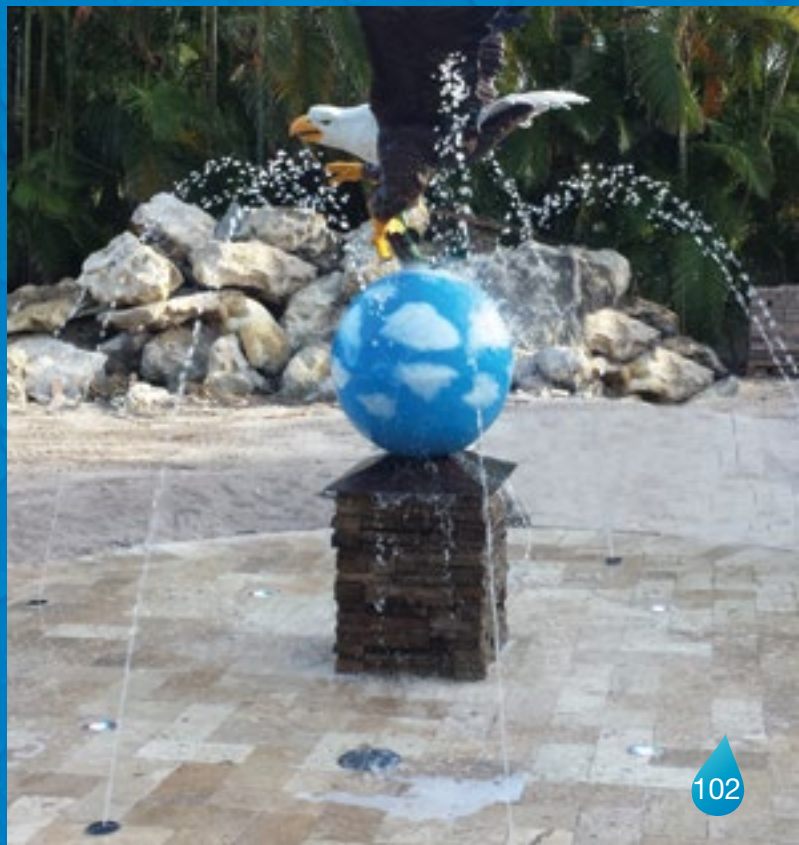

Splash Pad Kits

STAND ALONE SPLASH PAD KIT

- Rain Deck Nozzle Tool (RD100-0)
- Rain Deck 3" Housings (RD102-0)
- Rain Deck Adjustable Nozzles (RD103-0)
- Rain Deck 8 Zone Electronic Controller (RD505-0)
- Four (4) Solenoid Manifold (RD504-0)
- 1.5 HP Pump (RD416-0)
- 150 Square Foot Cartridge Filter (RD416-0)
- 6" Drain Grate with Strainer Basket (RD412-0)
- Rain Deck 150 Gallon Holding Tank (RD700-0)
- Two 1-1/2" & one 1/2" Bulk Head Fittings (RD418-0 & RD419-0)
- 1/2" Auto Water Leveler (RDS420-0)
- 1-1/2" Check Valve (RD414-0)
- 3-Way 1-1/2" Diverter Valve (RD413-0)
- In-Line Chlorinator (RD430-0)
- Rain Deck Installation Instructions

6 Nozzle Splash Pad Kit	RD200-0
8 Nozzle Splash Pad Kit	RD201-0
12 Nozzle Splash Pad Kit	RD202-0
16 Nozzle Splash Pad Kit	RD203-0

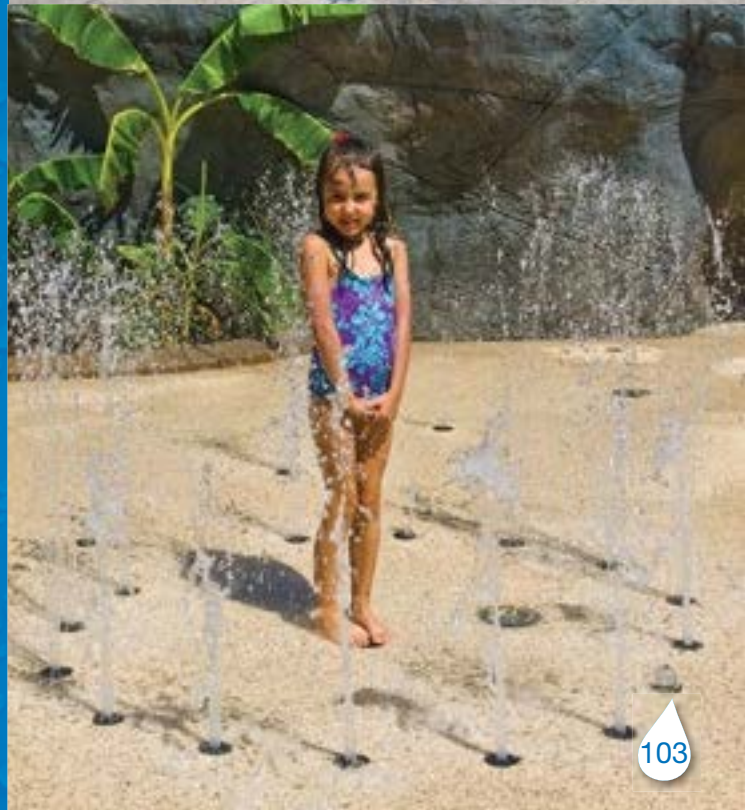

RAINDECK

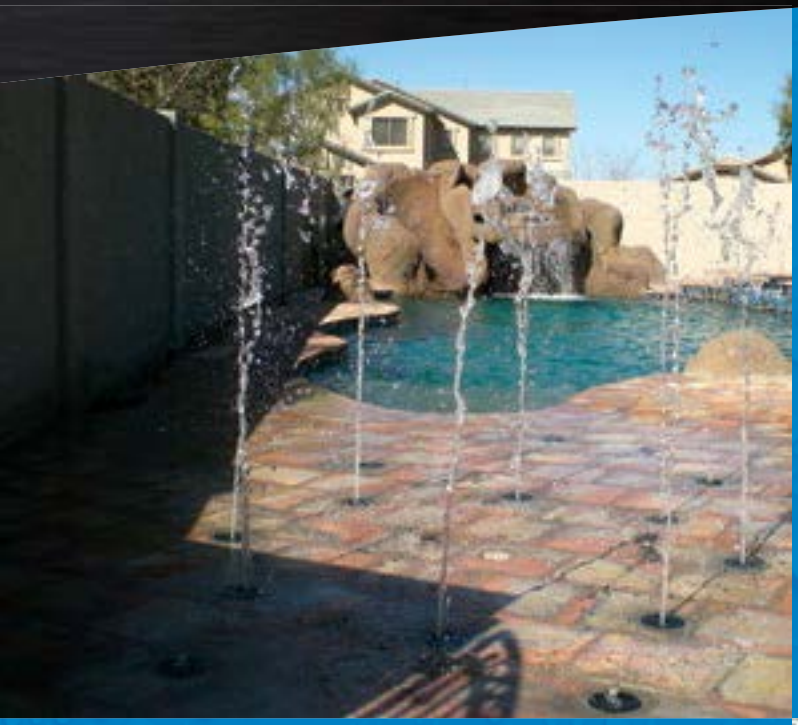

POOL TIE-IN SPLASH PAD KIT

- Rain Deck Nozzle Tool (RD100-0)
- Rain Deck 3" Housings (RD102-0)
- Rain Deck Adjustable Nozzles (RD103-0)
- Rain Deck 8 Zone Electronic Controller (RD505-0)
- Four (4) Solenoid Manifold (RD504-0)
- 6" Drain Grate with Strainer Basket (RD412-0)
- Rain Deck Installation Instructions

6 Nozzle Splash Pad Kit	RD200-1
8 Nozzle Splash Pad Kit	RD201-1
12 Nozzle Splash Pad Kit	RD202-1
16 Nozzle Splash Pad Kit	RD203-1

FRESH WATER SPLASH PAD KIT

- Rain Deck Nozzle Tool (RD100-0)
- Rain Deck 3" Housings (RD102-0)
- Rain Deck Adjustable Nozzles (RD103-0)
- Rain Deck 8 Zone Electronic Controller (RD505-0)
- Four (4) Solenoid Manifold (RD504-0)
- One (1) Main Solenoid
- 6" Drain Grate with Strainer Basket (RD412-0)
- Rain Deck Installation Instructions

6 Nozzle Splash Pad Kit	RD200-2
8 Nozzle Splash Pad Kit	RD201-2
12 Nozzle Splash Pad Kit	RD202-2
16 Nozzle Splash Pad Kit	RD203-2

RAINDECK

Control Systems & Activators

Rain Deck knows that every splash pad is unique. Operation hours, recirculation pump settings, spray jets/ features programming, water chemistry, etc. are some of the important electrical components to a splash pad. Rain Deck also understands that this is not "rocket science" we are dealing with. Rain Deck's control systems are extremely affordable, and also enable the splash pad installer and end user to fine-tune each aspect of the splash pad with ease.

RD550-0

RD500-0

RD502-0

RD500-0	RAIN DECK MULTI PROGRAM ELECTRONIC CONTROLLER
RD502-0	RAIN DECK 8 SOLENOID CONTROLLER MANIFOLD
RD503-0	RAIN DECK 6 SOLENOID CONTROLLER MANIFOLD
RD504-0	RAIN DECK 4 SOLENOID CONTROLLER MANIFOLD
RD505-0	RAIN DECK SINGLE PROGRAM ELECTRONIC CONTROLLER
RD550-0	RAIN DECK SOF-TOUCH ACTIVATOR W/ FOOTING BASE - POST MOUNTED
RD550-1	RAIN DECK SOF-TOUCH ELECTRONIC TIMER BOX
RD555-0	RAIN DECK SOF-TOUCH GROUND SENSOR
RDS550-0	SS SOF-TOUCH ACTIVATOR POST W/ FOOTING BASE
RDS550-1	SS SOF-TOUCH CURVED ACTIVATOR POST W/ FOOTING BASE
RDS555-0	SS SOF-TOUCH GROUND SENSOR

Pumps, Filters, Parts & More

Whether you need something simple for a backyard splash pad, something for a more sophisticated commercial splash pad, or anything in between, Rain Deck is your supplier for pumps, filters, chemical controllers and UV sanitizers of all types. Don't see something in our catalog? Don't worry! We have access to anything and everything pertaining to splash pads. Get us the part number, and let us quote it for you.

Splash pads are not just built with spray jets and dumping buckets. There are many "behind the scenes" parts that make up a splash pad. Some parts include check valves, 3-way valves, bulkhead fittings, auto water levelers, and more. Not sure how a certain part comes into play? Ask us! We will gladly give you the answers and information you need.

RD432-0

RD430-0

RD435-0

RD405-0	SHADE UMBRELLA SLEEVE
RD412-0	RD 6" DRAIN GRATE W/ STRAINER BASKET
RD413-0	HAYWARD 3-WAY PVC 1-1/2" DIVERTER VALVE
RD414-0	1-1/2" CHECK VALVE
RD415-0	FLOAT CHLORINATOR DISPENSER (1" TABS)
RD416-0	1.5 HP PUMP W/ 150 SQFT CARTRIDGE FILTER COMBC
RD417-0	TEST STRIPS-CHLORINE
RD418-0	RD 1-1/2" BULK-HEAD FITTING
RD419-0	RD 1/2" BULK-HEAD FITTING
RD420-0	RAIN DECK 1/2" AUTO WATER LEVELER
RD428-0	16" X 16" BOX DRAIN (4" PIPE CONNECTION)
RD429-0	RAINBOW 320 IN-LINE CHLORINATOR NSF
RD430-0	MINI IN-LINE CHLORINATOR
RD431-0	3" CHECK VALVE
RD432-0	RAIN DECK CHEMICAL CONTROLLER
RD433-0	STENNER 15 GALLON TANK
RD435-0	UV SANITIZER ES20 - 2" IN AND OUT - PRODUCT#35-08644
RD437-0	11" X 11" BOX DRAIN (4" PIPE CONNECTION)
RD614-0	1.5 HP PENTAIR WHISPER FLOW PUMP
RD615-0	TR100 PENTAIR SAND FILTER
RD616-0	2 HP PENTAIR WHISPER FLO PUMP
RD617-0	3 HP PENTAIR WHISPER FLO PUMP
RD618-0	TR140 PENTAIR SAND FILTER
RD619-0	320 SQ FT PENTAIR CLEAN & CLEAR CARTRIDGE FILTER
RD620-0	1.5 HP PENTAIR SUPER FLO PUMP
RD621-0	2 HP PENTAIR SUPER FLO PUMP
RD625-0	150 SQ FTPENTAIR CLEAN & CLEAR CARTRIDGE FILTER

RD615-0

RD418-0

RD420-0

RD431-0

Holding Tanks

Our standard splash pad tanks come in a variety of sizes to meet the demands of any size splash pad project. All of our tanks can be fitted with multiple fittings to be scalable for any number of water play features and dedicated recirculation lines. Each tank comes standard with one (1) suction line fitting, one (1) return line fitting, one (1) drain line port and one (1) auto fill hook-up fitting.

Our patented single wall and double wall Splash Pad Sediment Filtration Tank sets the industry standard for efficient water sanitation. This tank meets the criteria for the most stringent health code requirements. Our patented tanks can be used as a standalone splash pad recirculation tank or in combination with our other holding tanks for increased water demands.

*Please speak with a Rain Deck representative to determine the right tank size for your project.

RD701-0

RD703-0

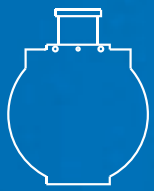

150 GAL
RD700-0

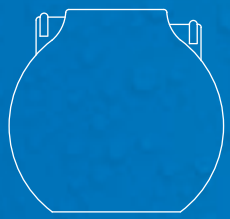

325 GAL
RD701-0

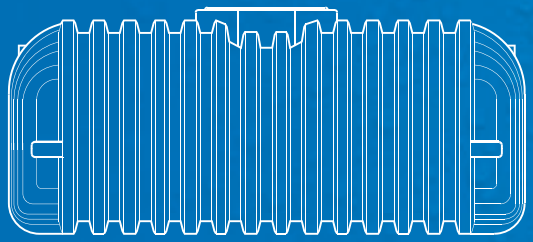

600 GAL
RD702-0

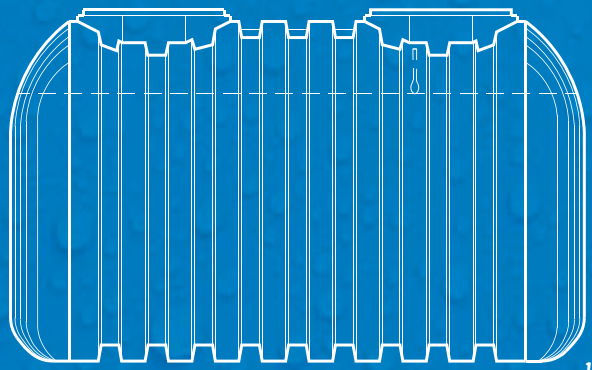

1200 GAL
RD703-0

RD700-0	RD 150 GALLON HOLDING TANK W/ FITTINGS AND AUTO FILL
RD701-0	RD 325 GALLON HOLDING TANK W/ FITTINGS AND AUTO FILL
RD702-0	RD 600 GALLON HOLDING TANK W/ FITTINGS AND AUTO FILL
RD703-0	RD 1200 GALLON HOLDING TANK W/ FITTINGS AND AUTO FILL
RD704-0	RD 1700 GALLON HOLDING TANK W/ FITTINGS AND AUTO FILL
RD705-0	RD 2000 GALLON HOLDING TANK W/ FITTINGS AND AUTO FILL
RD706-0	RD 2500 GALLON HOLDING TANK W/ FITTINGS AND AUTO FILL
RD707-0	RD 4000 GALLON HOLDING TANK W/ FITTINGS AND AUTO FILL

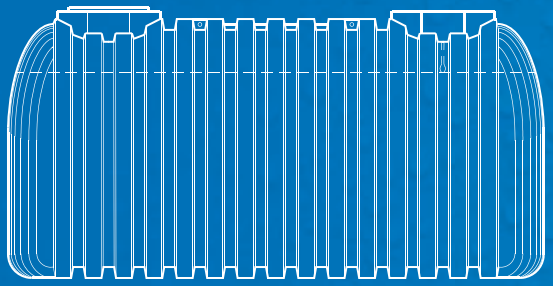

1700 GAL
RD704-0

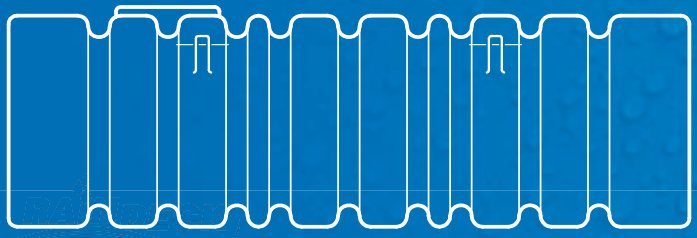

2500 GAL
RD706-0

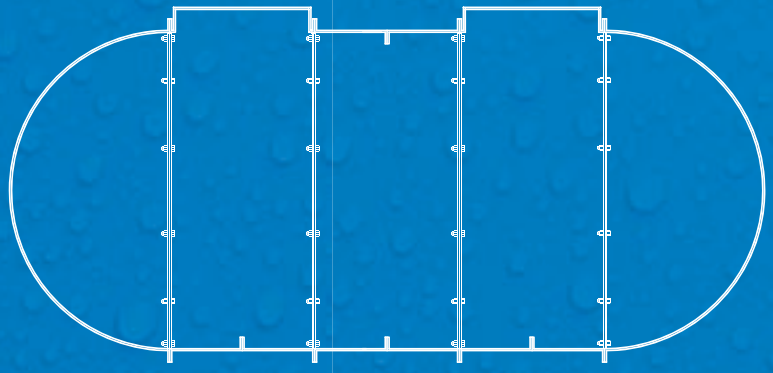

4000 GAL
RD707-0

RUBBER SURFACING

Rain Deck offers high quality granulated rubber in sixteen vibrant colors for comfortable, safe, and attractive splash pad surfacing. It can be combined in many different colorful and unique ways to create just the look you want.

Our rubber surfacing has been featured on multiple DIY network shows, including "the Vanilla Ice Project". Whether it's a fun beach lagoon with a pirate ship or a simple collage of colorful patterns, Rain Deck has the rubber surfacing to make it happen!

COLOR CHART

*Custom design patterns are available at an additional charge.

*NOTE: Color samples cannot be considered a totally accurate representation of the actual rubber color and should only be used as general guidance for selecting a color. All rubber surfacing may fade over time due to exposure to the elements.

Installation Support

Rain Deck has taken part in thousands of splash pad projects. From initial consultation, to design, to installation, and beyond, we have been a part of every step and process involved in splash pads. We have dug the ditches, plumbed the pipe, poured the concrete, installed the equipment... we've done it all. The best part is, we are willing to share this info with all of our customers any day of the week. Let us help you build your next splash pad.

Rain Deck offers an on-site training package for those that feel they could use a little extra help. Rain Deck's "Purchase With Confidence " program is the only one of its kind in the industry, designed specifically to meet the needs of our partners and their staff to save them thousands of dollars. Please contact us at 1-888-445-RAIN or raindeck.com for more information.

Rain Deck Online

facebook.com/RainDecksplashpads

twitter.com/Rain_Deck

instagram.com/rain_deck

linkedin.com/in/raindeck

google.com/+RaindeckSplashpads

youtube.com/c/RaindeckSplashpads

houzz.com/pro/raindeck

Connect with us online to learn more about our products and stay on top of all the latest Rain Deck news!

RAINDECK

RAINDECK

Please call or visit our website for more information

888.445.RAIN

www.raindeck.com

© 2015 Rain Deck, LLC. All Rights Reserved.